2015 Annual Report
Town of Cranberry Isles, Maine

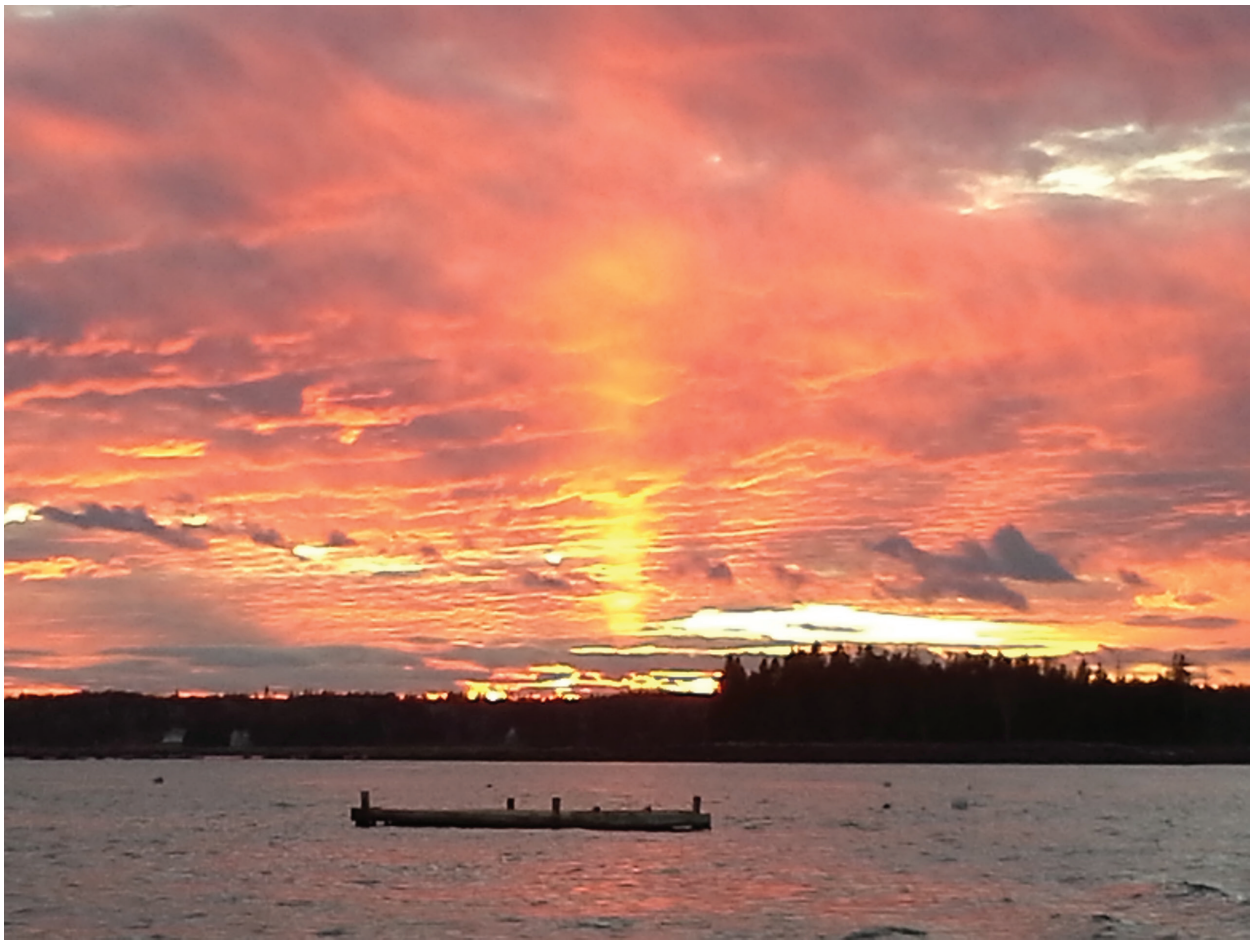

NOTICE TO TAXPAYERS

IMPORTANT

ALL TAXPAYERS SHOULD READ THE FOLLOWING
REQUIREMENTS AND COMPLY WITH THEM

Maine Revised Statutes Annotated, Title 36, § 706

Before making an assessment, the Assessor shall give reasonable notice in writing to all persons liable to taxation in the municipality to furnish to the assessors true and perfect lists of their estates, not by law exempt from taxation, of which they were possessed on the first day of April of the same year.

The notice to owners may be by mail directed to the last known address of the taxpayer or by any other method that provides reasonable notice to the taxpayer.

If notice is given by mail and the taxpayer does not furnish such list, he or she is thereby barred of his/her right to make application to the assessors for any abatement of their taxes, unless they furnish such list with their application and satisfies them that they were unable to furnish it at the time appointed.

The assessors may require the person furnishing the list to make oath to its truth, which oath any of them may administer, and may require him to answer in writing all proper inquiries as to the nature, situation and value of this property liable to be taxed in the State; and a refusal or neglect to answer such inquiries and subscribe the same bars and appeal but such list and answers shall not be conclusive upon the assessors.

IMPORTANT
PLEASE SAVE FOR FUTURE REFERENCE

Municipalities may, by vote, determine the rate of interest that shall apply to taxes that become delinquent during taxable year 2016 until those taxes are paid in full. The maximum rate of interest that can be charged per Title 36 M.R.S.A. § 504 (4) is:

7.00 Percent APR

Terry Hayes
Treasurer State of Maine
39 State House Station
Augusta, Maine 04333

Table of Contents

- Cover Page -*(cover photo courtesy of Sheila Krasnow)*
- Notice to Taxpayers — Inside Front Cover
- Table of Contents -*(photo courtesy of Joy Sprague*) — 1
- Town Officers & Officials — 3
- Photo Page In Memory -*(Photos courtesy of Mitchell McCormick and Ingrid Gaither)* — 7
- Town Clerk Report – *(Photo courtesy of Richard Hill)* — 8
- Treasurer Report — 9
- Tax Collector Report — 10
- General Assistance Notice — 14
- Municipal Advisory Commission Report — 15
- Administrative Assistant to the Selectmen Report — 16
- Islesford Pier Extension Proposal — 18
- General Plan, Elevation and Section Drawing — 19
- C.I. Pier Expansion Construction Cost Estimate — 20
- MRC Proposed Solid Waste Disposal Facility — 22
- MRC Preliminary Location Drawing — 23
- Code Enforcement Officer & Plumbing Inspector Report — 24
- Notice of Fees — 29
- U.S. Dept. of the Interior Coastal Barrier Resources System Report — 30
- Coastal Barrier Resource System Map — 32
- Harbor Committee & Islesford Harbormaster Reports — 33
- Photo Page GCI Dock/Double B –*(Photos courtesy of Ingrid Gaither & Joy Sprague)* — 34
- Cranberry Isles Manset Dockmaster Report — 35
- Local Health Officer Report — 38
- C.I. Health Committee Report — 39
- Animal Control Officer Report — 40
- Islesford Constable Report — 42
- G.C.I. & Sutton Island Constable Report — 43
- Photo Page Pauline Bunker/Parade –*(Photos courtesy of Tom Watson & Ingrid Gaither)* — 44
- Public Safety 5 Year Plan — 45
- Fire Department Report — 47
- Photo Page Cistern Project Collage -*(Photos courtesy of Katelyn Damon)* — 48
- GCI Volunteer Fire Department Report — 49
- Concept Drawing #1 for Proposed Pumper Fire Truck — 50
- Concept Drawing #2 for Proposed Pumper Fire Truck — 51
- C.I. Rescue Service Report -*(Photo courtesy of Katelyn Damon)* — 52
- Annual Town Meeting Warrant — 53
- Annual Report for the A.O.S. 91 Board — 69
- C.I. School Department Financial Statements — 72
- Photo Page Ashley Bryan School -*(photo courtesy of Sarah Corson)* — 77
- Cranberry Isles School Report — 78
- Broadband Communications Working Group Report — 80
- Association for the Preservation of Sutton Island Report — 81
- Islesford Neighborhood House Association Report — 82
- Photo Page Waiting/Christmas at GCI –*(Photos courtesy of Joy Sprague & Ingrid Gaither)* — 83

- Cranberry Isles Ladies Aid Society Report 84
- Great Cranberry Island Library Report 85
- Islesford Neighborhood House Library Report 86
- G.C.I. Historical Society / Cranberry House Report -*(Photo courtesy of GCI Historical)* 87
- Cranberry Isles Realty Trust Report 89
- U.S. Senator Susan M. Collins Report 90
- U.S. Senator Angus S. King Report 91
- Maine Senator Brian D. Langley Report 93
- Congressman Bruce Poliquin Report 94
- State Representative Walter Kumiega Report 95
- Governor Paul R. Lepage Report 96
- Auditor's Report, Financial Statements, Notes 97

TOWN OF CRANBERRY ISLES
TOWN OFFICERS AND OFFICIALS
2015

Selectmen and Overseers of the Poor

Richard F. Beal, Chair	(2016)	244-7235	rfbeal@wildblue.net
Florence Joy Sprague	(2017)	244-4309	joy.sprague@gmail.com
Malcolm Fernald	(2018)	244-7297	malcolmfernald@hotmail.com

Board of Selectmen's Meetings: *First Tuesday of each month, alternating between GCI and Islesford.*

Town Clerk/Treasurer/Tax Collector/General Assistance Administrator
Denise McCormick 244-4475 denise@cranberryisles-me.gov

Deputy Town Clerk/Assistant Treasurer
Nanette Daley Hadlock 244-4475 nan@cranberryisles-me.gov

Administrative Assistant to the Selectmen
James Fortune 244-4475 james@cranberryisles-me.gov

Tax Assessor
Matt Caldwell, CMA
RJD Appraisal, Inc.
Pittsfield, ME 04967 487-3273
Town Office Islesford 244-4475 (for appointments)

School Committee

Kelly Sanborn, (Chair)	(2017)	244-3624	kellyksancborn@gmail.com
Cari Alley	(2018)	244-9116	cischoolboard_3@yahoo.com
Amy Palmer	(2016)	244-3836	amy.will.adele@gmail.com

Superintendent of Schools
Howard Colter 288-5040/5049 hcolter@mdirss.org

School Principal
Heather Webster hwebster@mdirss.org

Constables

Richard Howland	(2016)	460-3016	rfhowland@hotmail.com
Richard Beal	(2016)	244-7235	rfbeal@wildblue.net

Code Enforcement Officer
Dennis Dever 244-8276 Dyonysys@twc.com
PO Box 1104,
Southwest Harbor, ME 04644

Please send Notification of Intention to Build forms to the C.I. Town Office, P.O. Box 56, Islesford, ME 04646. These will be forwarded promptly to the Code Enforcement Officer.

Animal Control Officer
Cari Alley (2016) 244-9116 ci_aco@yahoo.com

State Forest Fire Wardens
Richard Howland 460-3016 rfhowland@hotmail.com
Norman Sanborn, II 244-3624 ncsanborn2@gmail.com

Islesford Volunteer Fire Department Chief

Richard Howland		460-3016	rfhowland@hotmail.com

Cranberry Isles Rescue Service Chief
TCI Emergency Preparedness Agent
TCI Public Safety Coordinator

Katelyn Damon		479-8118	katelyn@cranberryisles-me.gov

Harbor Masters

Bruce Fernald	(2016)	244-5283	fernaldbruce@gmail.com
Norman Sanborn, II	(2016)	244-3624	ncsanborn2@gmail.com

Manset Dockmaster

Dennis Dever	(2016)	244-4475	Dyonysys@twc.com

Harbor Committee

William Dowling, Chair	(2018)	244-0106	dowling23@gmail.com
Richard Howland	(2016)	460-3016	rfhowland@hotmail.com
Theodore Spurling, JR	(2016)	244-5876	jerited@spurlingdesign.com
Scott Bracy	(2017)	460-5358	crustacean1980@yahoo.com
Nickolas Hadlock	(2017)	244-3132	nickohadlock@gmail.com

Harbor Committee Alternates

Roy Hadlock	(2016)	244-3132	fvtwochances@gmail.com
James Fortune	(2016)	504-0062	james@cranberryisles-me.gov

Local Health Officer

Cari Alley	(2018)	244-9116	cranberryisleslho@yahoo.com

Health Care Committee

Cynthia Thomas		244-5876	catislesford@hotmail.com
Ingrid Gaither		244-5058	ingridgaither@yahoo.com
Stefanie Alley		244-7466	salley1@prexar.com
Sally Rowan		244-3619	sabrjet1958@gmail.com
Joy Sprague		244-4309	joy.sprague@gmail.com
Karin Whitney		244-5933	philandkarin@gmail.com
Jasmine Samuel		244-5939	jasmine.samuel@gmail.com
Ann Fernald		244-3048	
Serena Spurling		244-7788	serenaleespurling@gmail.com
Thomas Powell		244-9698	tompowell@gmail.com
Rebecca Powell		244-9698	becannpowell@gmail.com
Jen Walls		286-4167	

Road Commissioners

Board of Selectmen		244-4475	

Municipal Advisory Commission

Cory Duggan, (Chair)	(2016)	244-1600	hikerboy14@gmail.com
Ron Axelrod	(2016)	244-3151	Ronaldaxelrod@aol.com
Chris White	(2018)	244-3964	CrnbryCst@aol.com
Karin Whitney	(2018)	244-5933	philandkarin@gmail.com
Ingrid Gaither	(2017)	244-5058	ingridgaither@yahoo.com
Joanne Thormann	(2018)	244-4119	joannethormann@gmail.com
Jasmine Samuel	(2016)		

Planning Board

Branden Stubbs, Chair	(2018)	450-8857	branden.stubss@gmail.com
R. Christian Johnston	(2016)	244-5215	cvjohnston@myfairpoint.net
Rebecca Powell	(2017)	244-9698	becannpowell@gmail.com
William Dowling	(2017)	244-0106	dowling 23@gmail.com
Sally Rowan	(2016)	244-3619	sabrjet1958@gmail.com

Board of Appeals

Beverly Sanborn	(2016)	244-3136	
Vacant	(2015)		
Theodore Spurling, JR	(2017)	244-7408	jerited@spurlingdesign.com
Kelly Sanborn	(2017)	244-3624	kellyksanborn@gmail.com
Ingrid Gaither	(2018)	244-5058	ingridgaither@yahoo.com

Broadband Communication Working Group

Tom Powell	244-9698	tompowell@gmail.com
Rosalie Kell	801-1062	rosaliekell@gmail.com
Ingrid Gaither	244-5058	ingridgaither@yahoo.com
Ralph Stevens	244-3619	rstevens@coppin.edu
Vacant		

Maine Islands Coalition Representative

Tom Powell	244-9698	tompowell@gmail.com

Acadia Disposal District Representative

James Fortune	244-4475	james@cranberryisles-me.gov

League of Towns Representative

James Fortune	244-4475	james@cranberryisles-me.gov

Fairpoint Communications: (telephone)

Loss of service:	1-866-984-1611
To order service:	1-866-984-2001

Redzone Wireless: (internet)

596-5700

Emera: (electric)

Power outage:	1-800-440-1111

Department of Marine Resources
Flat Closure Hotline: 1-800-232-4733

Web address for weather station on GCI:

http://www.wunderground.com/personal-weather-station/dashboard?ID=KMECRANB3#history

You can also go to www.wunderground.com and then enter Cranberry Isles under search locations.

United States Senate

Angus S. King	
135 Maine Street	(888)229-3420
Brunswick, ME 04011	info@angusformaine.com

United States Senate

Susan M. Collins	(202)224-2523 Office
413 Dirksen Senate Office Building	(202)224-2693 Fax
Washington, DC 20510	(207) 945-0417 Bangor
	www.collins.senate.gov

Congressman-House of Representatives

Bruce Poliquin	(207) 942-0583 Bangor
6 State Street, Suite 101	(207)942-7101 Fax
Bangor, ME 04401	http://poliquin.house.gov

Maine Senate

Brian D. Langley	(207) 287-1505 Augusta
11 South Street	(800) 423-2900
Ellsworth, ME 04605	(207) 667-5077
	langley4legislature@myfairpoint.net

Maine House of Representatives

Walter A. Kumiega	(207) 348-2548 Residence
36 Cedar Lane	(207) 479-5459 Cell
Little Deer Isle, ME 04640	Walter.Kumiega@legislature.maine-gov

Maine State Governor

Paul R. Lepage	(207) 287-3531
1 State House Station	(207) 287-1034
Augusta, ME 04333-0001	governor@maine.gov

IMPORTANT INFORMATION

TOWN OFFICE HOURS:

Monday through Friday, 9:00 AM to 3:00 PM.

The TOWN OFFICE IS CLOSED ON THE FOLLOWING DAYS:

New Year's Day	*Labor Day*
Martin Luther King Day	*Columbus Day*
Presidents' Day	*Veterans' Day*
Patriot's Day	*Thanksgiving Day*
Memorial Day	*Day after Thanksgiving Day*
Independence Day	*Christmas Day*

**** The Town Office will also be closed during the Board of Selectmen's Meetings.***

In Memory of Richard “Chuddy” Alley, SR

Henry Olearcek, Julie (Blank) Olearcek, Amanda Bracy at the Flotilla for Richard Alley, SR

TOWN CLERK REPORT 2015

VITAL RECORDS:

BIRTHS: 3

MARRIAGES: 5

DEATHS: 2

DOG LICENSES SOLD: 57

Respectfully Submitted:

Denise McCormick, Town Clerk

Hugh R. Dwelley and his grandson Raymond Dwelley
This photo is in memory of Hugh R. Dwelley whom the Town of Cranberry Isles lost in 2014. Due to an oversight in last year's report, we wish to include Mr. Dwelley's photo this year in hopes that his love of history and his municipal involvement will inspire our citizens to ever strive forward in our community, our state, our nation, and our world.

TREASURER'S REPORT 2015

Cash Balance January 01, 2015	1,059,933.91
Taxes Collected	1,732,494.48
Interest	8,787.66
Auto-Excise Tax	27,329.79
Boat-Excise Tax	4,437.70
State Revenue Sharing	2,550.66
Licenses & Agent Fees	374.25
Homestead Exemption Reimbursement	2,749.00
Veterans Exemption Reimbursement	55.00
Solid Waste Performance Credit	1,158.66
Metal Debris Sales	914.95
Local Road Assistance Program	6,968.00
Manset Property Rentals	43,528.08
Parking Fees Collected	75,430.00
Boat Sticker Fees	585.00
Misc. Administration Earning	1,868.06
Federal Land PILT	21,567.00
FTA/ME-DOT Commuter Ferry Subsidy	26,666.66
Manset-Land Sale	12,104.37
Sale of Float	500.00
School Revenue & State Reimbursements	72,711.90
Financial Warrants Drawn 2015	2,019,352.47
Cash Balance as of 12/31/15	637,284.00

TAX COLLECTOR'S 2015 YEAR END REPORT

2015 TAX COMMITMENT (MIL RATE 9.95)	**$1,923,315.45**
ABATEMENTS GRANTED	**13,488.22**
2% DISCOUNT TOTAL	**21,304.87**
2015 TAX COLLECTED	**$1,732,494.48**

2015 OUTSTANDING TAXES AS OF 12/31/15 $156,027.88

(* DENOTES PAYMENT WAS REC'D AFTER 12/31/15)

Allen, et al Charlene Louise	**261.68**
Alley, Annie R.	**1,356.19**
Barton, Nicholas T.	**2,021.84***
Blue Eagle Limited	**1,916.37**
Bowman Family LLC	**3,170.99**
Carolyn & Averill's Cranberry Dreamtime LLC	**4,910.33***
Chusid, Nancy	**1,293.50**
Dowling, WF & Meyers, B.	**2,116.36***
Grandgent, Henry	**1,354.20**
Gray, Erin M.F.	**2,114.37**
Ham, L.G. & Rees, R.R.	**2,043.73**
Hawes, Frederick B. & Allison H.	**4,493.42**
Hinnant, Miriam D.	**1,604.93***
Islesford Edith LLC	**3,011.87**
Keegan, Keiter & Bright	**7,246.58**
Liebow, Paul A.	**4,815.80**
McLendon, Sally P.	**829.19**
McLendon, Sally P.	**3,087.48**
Mills, David	**483.57**

Moran, Porter & Pickering	**569.82**
Murch, Janice	**1,125.34**
Nash, Bonnie Sue	**11,160.92**
Newlin, Jr., Frank B.	**21,255.19**
Newlin, Jr., Frank B.	**2,369.09**
Newlin, Jr., Frank B.	**1,488.52**
Newlin, Jr., Frank B.	**107.46**
Palmer, Heirs of Robert	**1,412.80**
Porter, Jane & Porter, Jeffrey	**632.81**
Ramsey, Donna & Judith	**205.99**
Robinson, John & Barbara	**5,409.82***
Rosenthal, Nadia A	**10,079.35***
Rosenthal, Nadia A	**5,931.20***
Rosenthal, Nadia A	**499.49***
Smith, Georgiana R.	**1,988.01**
Sordyl, David E.	**504.46**
Sordyl, David E.	**773.11**
The Cumming Family Trust	**10,733.06**
Valdina, Joan Et Al & Maypole Trust	**14,533.96**
Valdina, Joan S. & Eric Trustees	**1,864.63**
Vadina, Joan S. & Eric Trustees	**6,307.30**
Valdina-Krasnow, Susan Trustee	**972.11**
VanNocker, Anne Rhees	**7,146.09**
Veekay, LLC	**950.22**
<u>2014 Tax Receivables:</u>	
January 01, 2015	**96,134.97**
Collections	**74,727.22**

2014 Outstanding Taxes as of 12/31/15	**21,407.75**
Dowling, W.F. & Meyers, B	**28.88***
Nash, Bonnie Sue	**10,644.39**
Palmer, Heirs of Robert	**1,226.34**
Sordyl, David	**316.13**
Sordyl, David	**818.10**
Valdina, Joan S & Eric Trustees	**6,758.92**
Valdina, Joan S. & Eric Trustees	**1,614.99**

2013 Tax Receivables:	
January 01, 2015	**29,022.32**
Collections	**28,012.74**
2013 Outstanding Taxes as of 12/31/15	**1,009.78**
Sordyl, David	**281.39**
Sordyl, David	**728.19**
2012 Tax Receivables:	
January 1, 2015	**7,814.06**
Collections	**7,814.06**
2012 Outstanding Taxes as of 12/31/15	**-0-**
2011 Tax Receivables:	
January 01, 2015	**1,063.71**
Collections	**1,063.71**
2011 Outstanding Taxes as of 12/31/15	**-0-**

Outstanding 2014 Tax Liens filed 06/22/15 (Maturity Date: 12/22/2016)

Nash, Bonnie Sue	**$11,103.57**
Heirs of Robert Palmer	**1,449.16**

Sordyl, David	**373.65**
Sordyl, David	**895.15**
Valdina, Joan S. & Eric, Trustees	**7,067.00**
Valdina, Joan S. & Eric, Trustees	**1,723.03**

The Town of Cranberry Isles has a Tax Payment Policy under State Statute MRSA 36 §906 that all payments for Real and Personal Property Taxes are to be applied to the oldest outstanding tax obligations (principal and interest) of the Taxpayer. Effective 09/08/2009.

Respectfully Submitted:

Denise McCormick, Tax Collector

GENERAL ASSISTANCE
NOTICE

The municipality of Cranberry Isles administers a General Assistance Program for the support of the poor. Pursuant to Title 22 M.R.S.A. § 4305, the municipal officers have adopted an ordinance establishing that program. A copy of this ordinance is available for public inspection at the Town Office. Also available for inspection is a copy of the State's General Assistance Statutes, as copies of the State law are made available to the municipality by the Maine Department of Human Services.

Persons who wish to apply for General Assistance may do so at the Town Office, Islesford, during the following times:

Days:	**Monday – Friday**
Hours:	**9:00 A.M. – 3:00 P.M.**

In an emergency, applicants may dial:

211

The municipality's General Assistance Administrator must issue a written decision within 24 hours of receiving an application.

The Department of Human Services' toll–free telephone number, to call with a question regarding the General Assistance Program, is:
1-800-442-6003.

This notice is posted pursuant to Title 22 M.R.S.A. § 4304-4305.

MUNICIPAL ADVISORY COMMISSION REPORT (MAC)

To the Community of the Town of Cranberry Isles (TCI),

At year's end the Municipal Advisory Commission is made up of Chairperson Cory Duggan, Ron Axelrod, Karin Whitney, Chris White, Ingrid Gaither, Joanne Thormann, and Jasmine Samuel. This was a very busy year for the MAC. We met each Thursday after the selectmen's meeting at 4:00. Meetings start on time and have a goal of ending by 5:30.

We discussed future plans for the Town office that will serve the islands of TCI and considered some for temporary service. The Town office is currently housed in a temporary office trailer next to the fire station on Little Cranberry Island.

We devoted most of our time to the big issue of ferry service to the Cranberry Isles. Meeting weekly, as a joint group, the MAC and the Transportation Task Force tried to formalize a plan that would solidify our ability to have a say in how the service runs. All the while, a lot of outside influences created uncertainty while we worked on this. We ended the year with a recommendation for a service model, and submitted that to the Board of Selectmen for possible consideration at the annual Town meeting. We look forward to working with other groups in the community on this issue in the future.

Many members of our community joined in the meetings this past summer and into the fall by calling in. It is appreciated when community members give volunteered time and participate in these discussions about important issues for the Town.

Roads are always a topic of discussion. The MAC's assessment is that our roads are in fairly good shape and that maintenance should continue in order to preserve what we have. No new large paving or construction projects were recommended at this time.

There are other things that we have discussed that are on-going projects in town. The Islesford Dock extension has made progress with the Harbor Committee and the help of Jim Fortune. Parking has been an issue at times on both Islesford and Big Cranberry; we took some simple common sense first steps to alleviate congestion.

Lastly we met as a group with the Town Treasurer and Administrative Assistant to the Board of Selectmen (BOS) to offer budgetary recommendations to the BOS for 2016.

Currently there are three seats opening for a three-year term of service to the Municipal Advisory Commission. If you are interested in serving on this valuable municipal committee please contact any current member with questions.

As always the MAC would like to thank the Town's staff, Denise McCormick, Nan Hadlock and Jim Fortune for all of their good work and continued support of the MAC throughout the year.

Respectfully Submitted,

Cory J. Duggan, MAC Chair

ADMINISTRATIVE ASSISTANT TO THE SELECTMEN
MUNICIPAL FACILITIES REPORT

2015 was a year of continued effort improving municipal operations. Much of what occurred was due to the combined effort of the Board of Selectmen, Town Staff, and of course the many volunteers who donate their time and efforts. They deserve many thanks. A partial summary of projects and accomplishments from 2015 is presented below.

Docks & Harbors: We undertook a number of routine maintenance and repair projects for all Town docks this year as the Town continues making the necessary investments to maintain and improve its dock facilities at Great Cranberry, Islesford, Suttons Island and Manset. In addition to regular dock maintenance, we completed repairs on the LCI dock, replacing the stairs, a couple of pilings, and several cross-braces under the dock, among other repairs. We also replaced all of the ladders on the GCI dock improving access and safety. Chalmers Enterprises launches and maintains the Town's floats in Manset, while Roy Hadlock takes care of the floats at the Town docks at Great Cranberry, Islesford & Sutton. We thank them for their hard work and assistance with our floats. Possible extension of the Islesford dock in the future is being considered as part of an effort to improve overall harbor infrastructure and ferry/boat access. This will involve float and gangway reconfiguration and likely involve some reconfiguration of the mooring field in the harbor. Both the Manset and Islesford dock improvements are down the road and will involve substantial investment by the Town. The planning work the Town has been doing will continue next year, in laying the ground work and making plans for the eventual expansions and changes.

Parking & Roads: The Town completed a reconstruction of Main Street on Islesford in 2015. The section from Mosswood Road to the intersection with Bar and Cross Roads was completely reconstructed. Additional maintenance work was done on other Town roads, such as pothole repairs, intersection clearing and drainage improvements. A much larger effort will be made in 2016 to complete road-side clearing and ditching on Little Cranberry and Great Cranberry to improve site distances at a few intersections and clear away encroaching vegetation along roadways. Paving is scheduled for Maple Avenue, Hadlock Street, and portions of Sand Beach Road and Main Street on Little Cranberry, and two sections of Cranberry Road on Great Cranberry. However, roadwork done over the last 3 years has been at considerable expense and the Selectmen and Municipal Advisory Committee are recommending holding off on any additional road paving at this time. We continue to think of ways to be more efficient in how we organize parking in Manset and at the Joy Road lot. While we always fill the Northeast Harbor lot for the entire season each year there was greater demand for parking in Manset this summer than in recent years. We continually look for ways to keep things working smoothly for residents using that parking facility. The Joy Road lot is for short and long-term seasonal parking May to October, with a valid permit. Anyone parking there must display a valid sticker for each vehicle. Renter and guest parking are fine as long as a valid sticker is displayed in the car. The stickers can be passed around to be used for more than one vehicle. However, only one vehicle is permitted to use it at any given time; one Joy sticker does not cover multiple vehicles at the same time. We also have 20 overnight guest parking spots available in Manset and we encourage people to use them whenever possible. Spaces there are $10.00 per night and can be reserved ahead of time.

Town Property: The Town undertook additional maintenance projects in Manset this year. These projects are part of a multi-year effort to preserve the buildings and facilities there for long-term viability and protect the Town's investment. The Town has been using Manset reserve funds to accomplish most of this work. We want to thank all of the folks who help in this effort, Dennis Dever in particular for his diligence and good work in Manset. In August the Town Office was moved to a rented office trailer next to the Islesford Fire Station. Town staff will work out of this space. The new set up is working well for the Town, but it is intended to be temporary until we find a new more permanent location.

Cranberry Isles Commuter Ferry: The Cranberry Isles Commuter Ferry offers island residents additional ferry options year-round for early morning trips to and from Northeast Harbor and a late trip during the winter months. We are currently in the fifth year of the service, which is partially subsidized by the State of Maine. Downeast Windjammers currently operates the service on the Sutton during the winter season (October 15 to April 30), and Sail Acadia operates the service on the Elizabeth T for the summer season that runs May 1 to October 15. The Cranberry Isles Commuter Ferry provides an additional option for an earlier trip to Cranberry Isles in the morning year-round and latter ferry trips off-island in the evening during the winter. The commuter boat also includes a stop in Manset during the summer season, stopping in Northeast Harbor first before heading to Southwest Harbor.

Solid Waste: BCM has been providing the trash and recycling collection and hauling for the Town since 2012. BCM transports the Trash and recycling to a regional collection facility, Eastern Main Recycling in Southwest Harbor. The trash is transported to PERC in Orrington. The Town also participates in the Acadia Disposal District's annual waste collection for household hazardous waste and universal waste (monitors, computers, t.v.'s, printers, faxes, etc.). This year the collection day was held in late September. Hazardous waste and universal waste collected for Cranberry Isles tends to fluctuate quite a bit from year to year and is difficult to observe any meaningful trends. Collection was up this year. The Town is not licensed to collect and store this type of waste at its recycling stations on LCI and GCI and participates in the annual one-day household hazardous waste and universal waste collection each year, sponsored by the Acadia Disposal District. Removal of this type of waste helps the Town by providing residents with an organized way of removing potential contaminants and other hazardous waste from the islands on an annual basis. We continue to explore ways to make it easier for Sutton Island residents to also participate in the annual HHW/UW collection as well.

As always we will have a tremendous amount of work to do in the upcoming year with capital improvement projects and additional maintenance and upkeep at Town facilities. We thank our volunteers and once again look forward to working with them to sustain the high levels of cooperation and ensuing productivity we have come to expect as a Town.

Respectfully Submitted,
James Fortune, Administrative Assistant to the Selectmen

ISLESFORD PIER EXTENSION PROPOSAL

The Town Report has a preliminary plan showing construction and cost estimates for a pier extension at Islesford. The plan shows a 42-foot extension with a second set of outer stairs and repositioned gangway. The extension of the pier is to improve safety for ferry/boat access at all tides. The plan includes different options for a wave barrier built into the pier, with one using sheathing only and the other using a combination of piles and sheathing, much like it is today. There are a couple of options that show solid fill under the pile supported pier that we should be able to have permitted, albeit at greater cost. Neither of these fill options will bring the fill up to the high water mark, but the laid up granite should be able to get close to mid tide, and the heavy riprap will get to the normal low water or slightly above. Both of the solid wave fence options will give better protection from swells and both will not let waves pass under the wave fence, which can happen during the lower tides.

The base price estimates without the wave barrier costs included is $400,000. Costs for the wave fence options are: timber sheathing-$69,101; pilings and sheathing-$88,599; granite/rip-rap with solid fill behind the wave fence-$167,000. The costs will vary depending on the wave barrier option selected for the project. The Harbor Committee prefers the solid wave rip-rap or granite block with fill behind it. This would provide maximum protection for the dock. However, cost will be a factor in making a final recommendation in the final plan. No money has been committed to this project other than planning and engineering (approved at the 2015 Annual Town Meeting). That reserve account will pay for engineering and design services, and eventual permitting. Extension of the pier would not take place until at least 2017 or latter and will require approval at a future Town Meeting. It is anticipated that the Town will be able to receive grant finding for a substantial portion of the project. The engineering and design services will also cover investigation of and applying for state grants.

Additional Information and a full set of plans for the LCI dock extension are available in a handout. The handout will be available at the Town Office after February 8th.

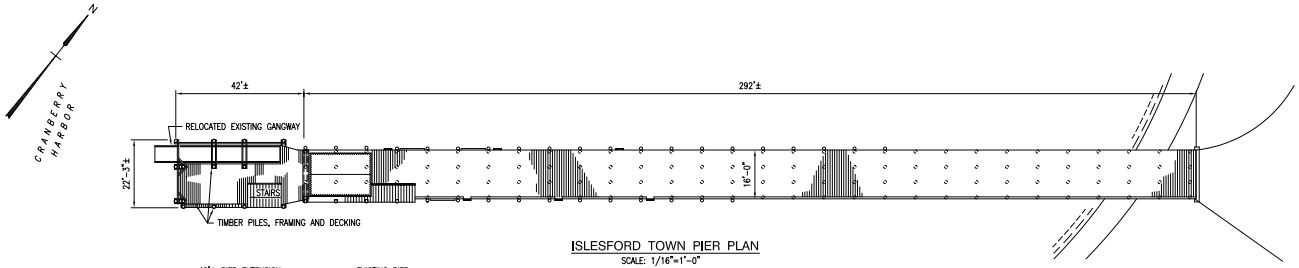

ISLESFORD TOWN PIER PLAN
SCALE: 1/16"=1'-0"

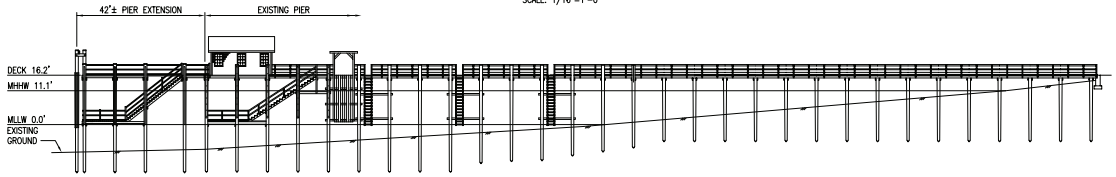

PIER ELEVATION
SCALE: 1/16"=1'-0"

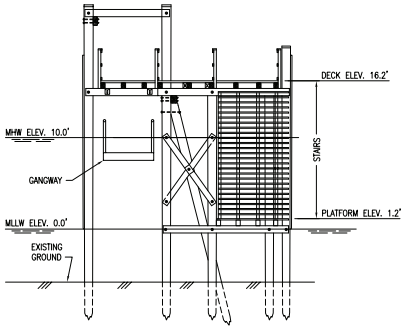

LOOKING EAST
PIER SECTION
SCALE: 3/16"=1'-0"

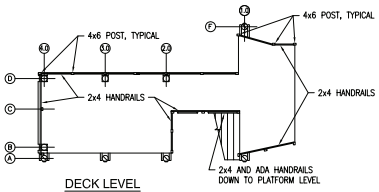

DECK LEVEL

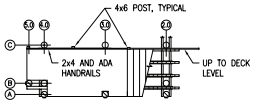

PLATFORM LEVEL

PLAN - POSTS AND HANDRAILS
SCALE: 1/8"=1'-0"

ISLESFORD TOWN PIER TOWN OF CRANBERRY ISLES, MAINE			
PIER EXTENSION			
GENERAL PLAN, ELEVATION AND SECTION			
STANTEC ENGINEERS · PLANNERS · SCIENTISTS BURLINGTON, MA			
SCALE: 1/16"=1'-0"	DES. PDP	CHK. TAD	APPROVED
DATE: JAN 2016	DR. RWT	PROJ. ENGR. DPA	

SHEET NO. 2 OF 6

CRANBERRY ISLES PIER EXPANSION
CONSTRUCTION COST ESTIMATE - 01/07/2016

PIER EXPANSION - NO WAVE BARRIER

ITEM NO.	DESCRIPTION	UNIT	UNIT PRICE	QUANTITY	COST
	PILES (CLASS "B" PILES DELIVERED TO MAINLAND):				
1	SYP 2.5 CCA 12" DIA - 55' X 10 = 550'	FT	$12.00	550	$6,600.00
2	SYP 2.5 CCA 12" DIA - 50' X 4 = 200'	FT	$12.00	200	$2,400.00
3	SYP 2.5 CCA 12" DIA - 45' X 15 = 675'	FT	$12.00	675	$8,100.00
	TIMBER:				
4	SYP - 2.5 CCA TREATED (3,900 X 1.1 = 4,290 BF)	BF	$1.90	4,290	$8,151.00
5	SYP - 1.0 ACQ TREATED (2,690 X 1.1 = 2,960 BF)	BF	$1.20	2,960	$3,552.00
6	HANDRAIL SYP - 1.0 ACQ TREATED (730 X 1.1 = 805 BF)	BF	$1.20	805	$966.00
7	UHMW STRIPS - 4" WIDE X 1 1/2" THICK - 19 EACH AT 20'	LF	$24.00	380	$9,120.00
8	CONE PILE CAPS (PRE-MOLDED - BLACK) - 12" DIA	EACH	$20.00	13	$260.00
	HARDWARE:				
9	1/2" DIA X 6" WITH WASHERS (RAILINGS)	EACH	$6.00	90	$540.00
10	3/4" DIA X 12" WITH WASHERS (POSTS)	EACH	$9.00	60	$540.00
11	3/4" DIA X 8" LAG BUTT WITH WASHER (UHMW)	EACH	$7.00	115	$805.00
12	1" DIA X 18" WITH WASHERS (BRACING)	EACH	$12.00	44	$528.00
13	1" DIA X 22" WITH WASHERS (CAPS)	EACH	$15.00	50	$750.00
14	1" DIA X 24" WITH WASHERS (BATTER PILES)	EACH	$15.00	6	$90.00
15	DRIFT PINS - 3/4" DIA X 14"	EACH	$7.00	110	$770.00
16	DECK SPIKES (6" LONG MINIMUM)	EACH	$2.00	1,400	$2,800.00
	GUIDE PILE POCKETS (3 EA) (FAB-GALV-DELIV):				
17	L 8 X 4 X 34"	LB	$3.00	450	$1,350.00
18	5/8 PLATE 16 X 36	LB	$3.00	324	$972.00
19	1" DIA X 12" BOLT WITH WASHERS & NUTS	EACH	$11.00	12	$132.00
20	3/4" DIA X 3" BOLT WITH WASHERS & NUTS	EACH	$5.00	6	$30.00
21	MISC. HARDWARE/TIMBER (Shingles, Small Nails, Gangeway Connections, e	LS	$3,000.00	1	$3,000.00
	MATERIAL SUBTOTAL				$51,456.00
	MOBILIZATION	LS	$75,000.00	1	$75,000.00
	LABOR & EQUIPMENT - 10 TO 12 WEEKS ($22,000/WEEK)	LS	$264,000.00	1	$264,000.00
	LIMITED DEMOLITION AND DISPOSAL	LS	$10,000.00	1	$10,000.00
	PIER TOTAL (NO WAVE BARRIER)				**$400,456.00**

WAVE FENCE - TIMBER SHEATHING

ITEM NO.	DESCRIPTION	UNIT	UNIT PRICE	QUANTITY	COST
1	SYP 2.5 CCA TREATED TIMBER (1,368 + 5,328 = 6,696 X 1.1 = 7,350 BF)	BF	$1.90	7,350	$13,965.00
2	BOLTS WITH WASHERS & NUTS 3/4" DIA X 11"	EACH	$9.00	1,184	$10,656.00
3	BOLTS FOR WALES TO PIE (10 PER WALE LENGTH) 1" DIA X 18"	EACH	$12.00	40	$480.00
4	LABOR & EQUIPMENT - 2 WEEKS	LS	$44,000.00	1	$44,000.00
	WAVE FENCE - TIMBER SHEATHING TOTAL				**$69,101.00**

WAVE FENCE WITH PILES & SHEATHING

ITEM NO.	DESCRIPTION	UNIT	UNIT PRICE	QUANTITY	COST
1	PILES - 12" DIA - SYP 2.5 CCA (43 PILES X 40 FT = 1,720 FT)	FT	$12.00	1,720	$20,640.00
2	SYP 2.5 CCA TREATED TIMBER	BF	$1.90	3,128	$5,943.20
3	BOLTS - 1" DIA X 18"	EACH	$12.00	190	$2,280.00
4	LAGS - 1" DIA X 6"	EACH	$8.00	592	$4,736.00
5	LABOR & EQUIPMENT - 2.5 WEEKS	LS	$55,000.00	1.0	$55,000.00
	WAVE FENCE - PILES & SHEATHING TOTAL				**$88,599.20**

ALTERNATES - SOLID FILL BEHIND WAVE FENCE

ITEM NO.	DESCRIPTION	UNIT	UNIT PRICE	QUANTITY	COST
ALT 1	SOLID FILL ALTERNATE #1 - HEAVY RIP RAP	LS	$17,000.00	1	$17,000.00
ALT 2	SOLID FILL ALTERNATE #2 - LAID UP GRANITE	LS	$135,000.00	1	$135,000.00
ALT 3	VERTICAL ROCK SOCKET ALTERNATIVE	EACH	$6,000.00		
ALT 4	BATTER ROCK SOCKET ALTERNATIVE	EACH	$8,000.00		

MUNICIPAL REVIEW COMMITTEE (MRC)
PROPOSED SOLID WASTE DISPOSAL FACILITY

The Town Report includes a plan showing the proposed location for a new waste to energy plant that will utilize new technology to process solid waste into natural gas. After several years of planning and review, the Municipal Review Committee (MRC), which represent its member Towns of which Cranberry Isles is one, has developed a plan and set of agreements/contracts for the new facility to be located in the Town of Hampden. The new facility will replace the 30-year old PERC facility in Orrington, which would require additional permitting and investments to continue operating. It has been determined by the MRC that the PERC facility is too large and outdated for the needs of 150 member towns and will not be profitable after 2018 when the electric power generation contracts expire. Voters in member Towns are being asked to approve a 15-year contract with the MRC that would authorize the MRC to sign contracts and agreements with Fiberight, Inc. to develop and operate the new facility in Hampden. If approved by voters, each Town's Selectmen will be authorized to sign a Municipal Joinder Agreement to continue its relationship as a member Town with the MRC, which is the subject of Article in the Town Warrant. Approval of the agreement will continue Cranberry Isles membership in the MRC and would require the Town to send its solid waste to the new Fiberight facility after March 2018, when PERC permits and contracts expire. The agreement would not be binding until the MRC signs with Fiberight in May 2016. That will depend on how many communities agree to the new contracts and the amount of waste directed to the Fiberight facility. Member Towns will need to collectively commit to sending a minimum of 150,000 tons of solid waste annually. There are no additional cost to member Towns for development and start-up of the facility. Development and start-up costs will be entirely the responsibility of the MRC and Fiberight.

Additional Information on the MRC proposal for Solid Waste is available in a handout. The handout will be available at the annual Town Meeting, and at the Town Office after February 8th. You can also go to ***mrcmaine.org*** and click on post-2018 for more details and documents on the Municipal Review Committee's website.

MRC Preliminary Location

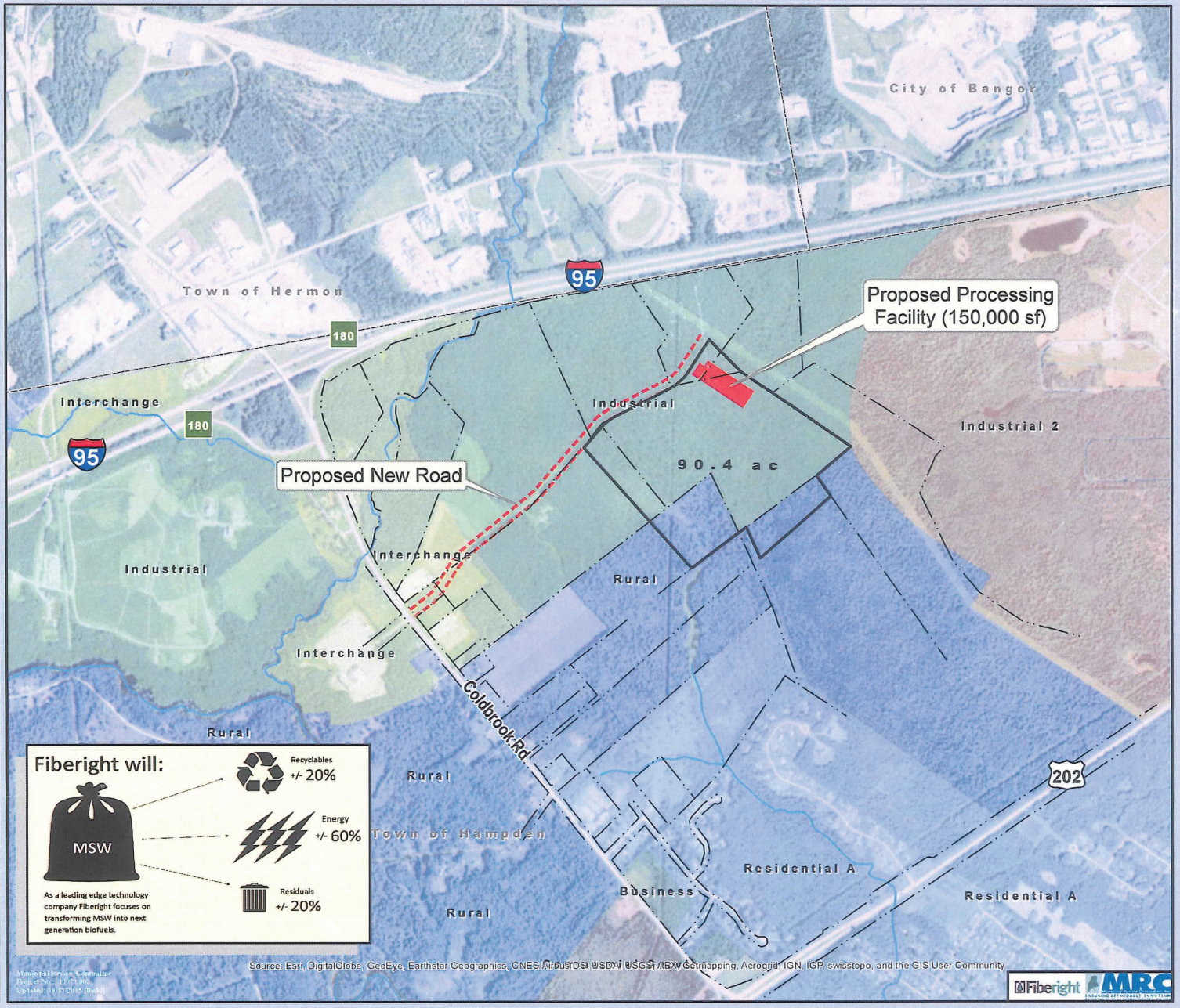

N
W E
S

1,000 500 0 1,000
Feet

Legend

- Town/Owner Preferred Location
- Property Lines
- 100' ROW
- Streams
- Proposed Building Location
- Town Boundaries

Zoning District

- Business
- Commercial Service
- Industrial
- Industrial 2
- Interchange
- Residential A
- Rural

MAP NOTES:

1: SITE DATA DEVELOPED BY CES, INC., DECEMBER 2015.

2: ELEVATION DATA COURTESY OF MAINE OFFICE OF GIS (MEGIS).

3. PARCEL AND ZONING DATA COURTESY OF THE TOWN OF HAMPDEN.

4. BASE MAPPING LAYERS ARE SERVER-BASED IMAGERY, TOPOGRAPHIC IMAGES, OR TERRAIN DEPICTIONS COURTESY OF ESRI. ACQUIRED OCT. 2014.

5: MAP IS PROJECTED USING THE UNIVERSAL TRANSVERSE MERCATOR (UTM) PROJECTION, ZONE 19 NORTH, METERS AND REFERENCES THE NORTH AMERICAN DATUM OF 1983 (NAD83).

6: NORTH ARROW IS REFERENCED TO GRID NORTH.

7: INTENDED FOR REFERENCE PURPOSES ONLY. THE MRC & CES, INC. AND THEIR AFFILIATES ARE NOT RESPONSIBLE FOR THE MISUSE OF THIS MAP OR DATA DEPICTED HEREIN.

CES INC

CODE ENFORCEMENT OFFICER & PLUMBING INSPECTOR (CEO & LPI) REPORT

I was appointed as your Primary Code Enforcement Officer and Local Plumbing Inspector in early October after serving for a couple years in those capacities as the Alternate. Kim Keene moved on from the CEO position after over fifteen years and numerous challenging situations. Those are some big shoes to fill. Kim's record keeping and attention to detail is top notch and made the transition relatively easy. In addition, the Town's website makes available the essential documents and maps required to carry out routine land use tasks, thanks in great part to Richard Hill, our web designer.

Thanks to Denise, Nan, and Jim at the Town Office for providing clarification and background details needed to carry out work in a job where every situation is different. Special appreciation goes to Nan for single handedly moving several heavy boxes and bags containing the Town's property files and maps up from the Islesford Town Dock to the Town Office Trailer when they arrived from Northeast Harbor during the CEO transition. Then she helped me move them back down to the floats and into my boat for transfer to their new home in Southwest Harbor. Moreover, Nan has the daunting task of detailing my rough drafts of proposed ordinance changes and associated data, lots of it, into a product fit for a Town report and meeting. Finally, kudos goes to Brandon Stubbs who stepped up and accepted nomination as our new Planning Board Chairman.

I strive to carry on a team concept into the complexities of land use, code enforcement, and the inevitable permitting processes that can involve shoreland zoning, flood plains, and other challenges to work through. It is after all, an island community whose character depends on respecting those areas. I believe the Code Enforcement Officer should be solution oriented, strive to facilitate among the parties involved in projects and proactively work within the framework of regulations so that a permit is obtained and the job gets finished in the least destructive and most efficient and cost effective way allowable.

Call me whenever you think it might be a good idea. My goal is to return calls I miss on the same day, and respond to requests for inspections and site visits within twenty-four hours, conditions permitting (although more advance notice is always appreciated). We also have the advantage of a great meeting place at the Manset dock and parking facility. I'm there daily throughout the summer season. Come by boat, by car or by the Island Explorer busses.

We have some significant proposed ordinance changes in the works. First, changes are proposed to the Land Use and Shoreland Zoning Ordinance into the standard state format, which relaxes some requirements over our current format. It's also vastly easier to update with changes that the Department of Environmental Protection (DEP) comes out with every three or four years. When things are faster and easier, we can do more things. The changes are mostly very minor, but obtaining a copy of the existing and the proposed ordinances and looking at them side by side clearly shows the advantages of the new one.

Our Flood Insurance Rate Maps (FIRMs), which show areas of the Town islands that are subject to flooding, how much flooding, and what kind of flooding are in the final stage of updating by the federal government, via the State Floodplain Management Program. These should arrive in January along with our Floodplain Management

Ordinance which the state is graciously updating to match the new maps and any new requirements. Already being in an electronic standard format, we expect minimal changes.

We are proposing updates to the Building Notification Ordinance to clarify the need for CEO approval before permitting a project and updating the referenced statutes that had since been repealed. Recently a new structure might have been built atop an existing septic system had we not done the approval process and relocated the building site a little bit.

The State requires a Town Holding Tank Ordinance for towns to permit residential septic holding tanks. So I've submitted a proposed standard ordinance for that. Usually holding tanks are a last option in places unsuitable for typical systems; without the ability to permit holding tanks, some sites might not be reasonably buildable. Or some existing residences might have to be abandoned if the old septic system fails and the lot is not acceptable for a new leach field system.

We'll continue working on existing ordinances and forms to get them in a modern electronic format that's easier to understand and work with. I'm getting good feedback from our users and hoping for more. Some of these go back to the 1970s and were done on a typewriter and had been "Xeroxed" a few times.

Summary of Permits Issued in 2015

There were five Notification of Intention to Build Applications (NTB) and/or Site Plan Applications for the Shoreland Zone (SPASZ). There were two plumbing permits issued. No Flood Hazard Development Permits were issued.

The breakdown of the 2015 Notification of Intention to Build and/or Site Plan Application permits is as follows:

Residential shed/ shed addition	2
Residential garage addition	1
Residential Studio	1
Commercial deck/ porch renovation	1
Total	5

The breakdowns of the 2015 plumbing permits are as follows:

Subsurface wastewater disposal systems	1
Internal Plumbing	1
Total Permits Issued	2

Code Enforcement Nuggets of Knowledge

Shoreland Zoning, Why all this regulation, Why penalties up to $5,000 per day for a first offense and up to $25,000 for second offenses? The natural resources of Cranberry Isles have been spared the degree of development and land use in other parts of the state. Here are a couple examples of ecological and consequently economical, recreational, and property value disasters that will develop and occur without controlling source pollution.

Phosphorus and Recreation Economies and Property Values. A somewhat sinister aspect of the lake and wetland phosphorus problem is that it can build significantly over time without showing any visible signs of water quality deterioration and then suddenly, within a very few years, become dramatically apparent in the form of widespread algae blooms and lost fisheries.

The experience of China Lake, up by Vassalboro in the mid-1980's is instructive in this regard. Excellent water quality and trout, togue, and salmon fisheries were lost over the course of about three years during which the cumulative impact of phosphorus loading due to development, at first unnoticed, suddenly made itself apparent. Large algae blooms caused unsightly and odorous floating yellow, green and brown mats of algae on the surface of the lake. The water lost its clarity, its oxygen content decreased, and its coldwater fisheries were destroyed. The loss of the pristine quality of the lake and its fisheries has, in turn, caused adverse economic impacts, including declining property values around the lake and a loss of fishing and other recreation related business in the area. In addition, the costs of lake restoration will exceed $1,000,000 and it is still unlikely that the former water quality of China Lake will ever be regained by these efforts. This is just one devastated water body of probably thousands.

Shell fishing. Nitrogen is one pollutant of primary concern in marine waters. Nitrogen is introduced from a number of sources other than septic and overboard discharge systems. These include atmospheric deposition, storm water runoff, and upwelling (an upward surge) of nutrient rich deep waters. Even a properly designed septic system is not designed to remove nitrogen. The impacts from overly enriched water range from mildly altered ecosystem processes, such as subtle shifts in phytoplankton (a food source fish populations are heavily dependent upon) populations to severe oxygen depletion that kills fish and shellfish. The loading of nutrients into near shore embayment waters can lead to a condition known as eutrophication. Excessive amounts of nutrients cause phytoplankton to multiply and or bloom in great quantities. When the phytoplankton sinks and dies, bacteria decompose the plankton and deplete the dissolved oxygen in the water. If dissolved oxygen levels become too low, shellfish and other bottom dwellers may die. This is one reason why DEP is pushing to remove licensed overboard discharge wastewater systems.

A massive shellfish kill in Maquoit Bay in the fall of 1988 was caused by an unusual bloom of phytoplankton that settled to the bottom and within forty-eight hours had smothered eighty percent of the soft-shelled clams, European oysters, and other shellfish in the bay.

Excessive nitrates from land runoff may also contribute to or increase the frequency and/or duration of **red tide algae** blooms. Red (tide) algae blooms pose a health hazard when shellfish, which eat the algae, also ingest the toxins that these algae produce. These toxins are dangerous and can be lethal to humans who eat the contaminated shellfish. Accordingly, red tide alerts force the temporary closure of shellfish beds and a consequent loss of shell fishing income. Current research is inconclusive regarding the causes of red tides, but it indicates that they may be linked to the availability of nitrates and perhaps iron, as well.

Earth work in the Shoreland Zone: Effective January 1, 2013, **excavation contractors** conducting excavation activity in a **shoreland** area **must be certified** in erosion control practices by the Maine DEP. A certified person is required to be on site the entire time the earthwork is taking place. Excavation activity includes the disturbance of soil, including grading, filling and removal of more than one cubic yard of earth material. **Our Land Use and Shoreland Zoning Ordinance (LUZO) currently requires a permit from the Code Enforcement Officer for filling/ earth moving less than 10 yards of material in the Shoreland Zone, and a Planning Board permit to work over 10 cubic yards of material.** One of our pending proposed changes to the LUZO is to follow state guidelines, remove the Planning Board requirement and allow the CEO to issue all earth work and filling permits with less of an ordeal.

Island contractors are urged to certify in this program. Training is free, held in Ellsworth from time to time, and carries other benefits. Contact me for more information.

Subsurface Wastewater Disposal Systems

Permit Required: Work must not be started until the LPI has issued a disposal system permit for the work. Installing a new, expanded, or replacement subsurface wastewater disposal system, or any individual components, requires a permit.

A disposal system **permit is not required** for minor repairs or replacements made, as needed, for the operation of pumps, siphons, aerobic treatment units, sand filters, or accessory equipment, the clearance of a stoppage in the building sewer which does not require excavation and/or exposure of system components or sealing of a leak in the septic tank, holding tank, pump tank, or building sewer.

Septic System Prohibitions:
The use of system cleaners that contain restricted chemical materials is deemed a discharge of industrial wastes and is prohibited.
Chemicals, other than normal amounts of household cleaners, must not be disposed of in the disposal field. Examples of prohibited chemicals include, but are not limited to, pesticides, oil-based paints or stains, paint remover, paint thinner, acids, gasoline, solvents, glues and adhesives, pool chemicals, paint, paint thinner, commercial grease and oil, darkroom chemicals, and medications.

Roof drains and foundation drains must not be connected to systems.

The use of septic tank cleaners and degreasers prohibited: The DEP does not recognize any additive as being beneficial to the operation of a subsurface wastewater disposal system. The use of septic tank additives containing halogenated hydrocarbon compounds is prohibited.

No portion of a structure may be located on any part of a disposal area.

If a municipality has not adopted a holding tank ordinance, holding tanks for residential first-time use are not allowed within that municipality.

New rule as of August 2015: All subsurface wastewater applications (HHE-200 forms) that have not yet been permitted, that are more than two years old must be reviewed by the Site Evaluator and updated as required.

Internal Plumbing

Permits Required: Its unlawful for any person, firm, or corporation to make any installation, alteration, repair, replacement, or remodel any plumbing system or to cause the same to be done without first obtaining a separate plumbing permit for each separate building or structure.

A permit is not required for the stopping of leaks, clearing of stoppages, the removal and reinstallation of water closets provided such repairs do not involve or require the replacement or rearrangement of valves, pipes or fixtures; or installation of domestic heating appliances by licensed Master Oil Burner Technicians or Propane and Natural Gas installers.

Common Plumbing Code Faux Pas

- Outside Showers are required to be connected to the waste drainage system of the premises.
- No plumbing piping shall be directly embedded in concrete and masonry.
- Water closets and seats for public use must be of the elongated type.
- Polyethylene extruded (PEX) tubing shall not be installed within the first18 inches of piping connected to a hot water heater.
- Fill in trenches around plumbing piping must be clean earth with no stones larger than 3/16 inch.
- Food and drink shall not be stored, prepared or displayed beneath soil or drain pipes unless the pipes are protected against leakage or condensation.

Thanks for the opportunity to make a difference,

Dennis Dever, CEO, LPI

NOTICE OF FEES

- State law requires fees be paid prior to issuing a permit.
- Pay fees to the Town of Cranberry Isles through the Town Office.

Disposal System Components	Fee
Complete Non Engineered System	$250
Primitive System	$100
Alternative Toilet	$50
Non-engineered treatment tank	$150
Holding Tank	$100
Non Engineered Disposal Field	$150
Separated Laundry System	$35
Complete Engineered System	$200
Engineered Treatment Tank (only)	$80
Engineered Disposal Field	$150
Miscellaneous Components	$30
First Time System Variance	$20
Seasonal Conversion Permit	$50

Internal Plumbing	Fee
Minimum Fee (any permit, includes up to 4 fixtures)	$40
Individual Fixtures (each, over 4 total)	$10
Hook up to Public Sewer	$10
Hook up to existing Subsurface System	$10
Piping relocation (no new fixtures)	
Permit Transfer	$10
Manufactured Housing Hook up (unless fixtures added on site, per fixture, if not new)	$10

United States Department of the Interior

FISH AND WILDLIFE SERVICE
Washington, D.C. 20240

In Reply Refer To:
FWS/AES/DBTS/BGMTS/060101

MAY 06 2015

Mr. Richard Beal
Town of Cranberry Isles
P.O. Box 56
Isleford, Maine 4646

Dear Mr. Beal:

The U.S. Fish and Wildlife Service (Service) has adopted final revised maps for all of the John H. Chafee Coastal Barrier Resources System (CBRS) units in Delaware, Maine, Maryland, New Jersey, South Carolina, Texas, Virginia, 13 units in North Carolina, one unit in Florida, and one unit in New York.. These maps were prepared by the Service in partnership with the Federal Emergency Management Agency (FEMA). The revised maps for Delaware, South Carolina, Texas, and one unit in Florida, were made effective upon publication of a notice in the *Federal Register* (79 FR 21787) on April 17, 2014. The revised maps for Maine, Maryland, New Jersey, Virginia, 13 units in North Carolina, and one unit in New York, were made effective upon publication of a notice in the *Federal Register* (80 FR 25314) on May 4, 2015. Comprehensively revised maps for North Carolina Units L07, L08, and L09 were made effective on December 18, 2014, via Pub. L. 113-253; therefore, the revised maps for these three units prepared in partnership with FEMA need not be adopted administratively by the Service.

The Service invited Federal, State, and local officials to review earlier draft versions of the maps and provide input on the proposed modifications during a stakeholder review period for each respective batch of states. The Service made no changes to the CBRS boundaries depicted on the draft maps as a result of the input provided during the stakeholder review periods, but did provide responses to comments received in the final *Federal Register* notices.

The revised maps fulfill a directive in the Coastal Barrier Resources Act (CBRA) that requires the Secretary of the Interior (Secretary) to review the CBRS maps at least once every five years and make any minor and technical modifications necessary to reflect changes in the size or location of the CBRS units as a result of natural forces (16 U.S.C 3503(c)). The CBRA (16 U.S.C. 3505(f)) requires that the final maps reflecting these modifications be provided to the appropriate Federal, State, and local officials and Congressional Committees. The *Federal Register* notices, final maps, updated digital CBRS boundary data, and additional information concerning the CBRS can be found on the Service's website at: *www.fws.gov/CBRA*.

The CBRA of 1982 (16 U.S.C. 3501 *et seq.*) was enacted by Congress to minimize the loss of human life, reduce wasteful Federal expenditures, and minimize damage to the natural resources associated with coastal barriers. The CBRA established the CBRS, a defined set of geographic units located along the Atlantic, Gulf of Mexico, Great Lakes, U.S. Virgin Islands, and Puerto Rico coasts. These units are delineated on a set of maps enacted by Congress and maintained by the Service. Most new Federal expenditures and financial assistance that have the effect of encouraging development, including Federal flood insurance, are prohibited within the CBRS. CBRA does not prohibit development, and it imposes no restrictions on development conducted with non-Federal funds (although some State and local governments have adopted additional restrictions that apply to the CBRS).

The Secretary, through the Service, is responsible for administering the CBRA, which includes maintaining and modernizing the official maps of the CBRS, consulting with other Federal agencies concerning proposed Federal expenditures within the CBRS, and making recommendations to Congress regarding proposed changes to the CBRS. Aside from three minor exceptions, only Congress—through new legislation—can modify the maps of the CBRS to add or remove land. These exceptions, which allow the Service to make limited administrative modifications to the CBRS boundaries, include: (1) the CBRA requirement which considers changes that have occurred to the CBRS by natural forces such as erosion and accretion; (2) voluntary additions to the CBRS by property owners; and (3) additions of excess Federal property to the CBRS (16 U.S.C 3503(c)-(e)). Changes that are outside the scope of this authority cannot be made by the Service administratively; such changes must be made through the "comprehensive map modernization" process (also referred to as the "technical correction" process), which is more time and resource intensive because it entails significant research, public review, and Congressional enactment of the revised maps. Therefore, at this time, the Service was only able to consider changes to the maps which are consistent with our administrative authority to modify the CBRS boundaries.

The updated CBRS maps are part of an interagency "digital conversion" effort between the Service and FEMA. The digital conversion effort was undertaken to improve the accuracy, integrity, and usability of the CBRS data and maps. This effort will help increase compliance with the CBRA by reducing erroneous Federal expenditures (including invalid flood insurance policies) within the CBRS and improve government efficiency and customer service by providing more reliable and user-friendly CBRS maps and digital data to the public. The final CBRS boundaries produced through this digital conversion effort will also be shown on FEMA's Flood Insurance Rate Maps.

Now that the final revised CBRS maps are effective, we encourage Federal, State, and local officials to consider integrating the updated CBRS data into their GIS platforms and other information systems so that CBRS information is readily available to community officials, developers, property owners, prospective buyers, and others. We also encourage public officials to consider including CBRS information in other places such as outreach materials, building permit forms, and planning documents. These actions could help to increase awareness of the CBRS and the associated prohibitions on Federal expenditures, which will aid stakeholders in making informed decisions about areas affected by CBRA.

We thank you for your input and involvement in this important process. If you have any questions concerning this matter, please contact Ms. Martha Balis-Larsen, Chief, Division of Budget and Technical Support, at (703) 358-2171.

Sincerely,

Gary Frazer
Assistant Director for Ecological Services

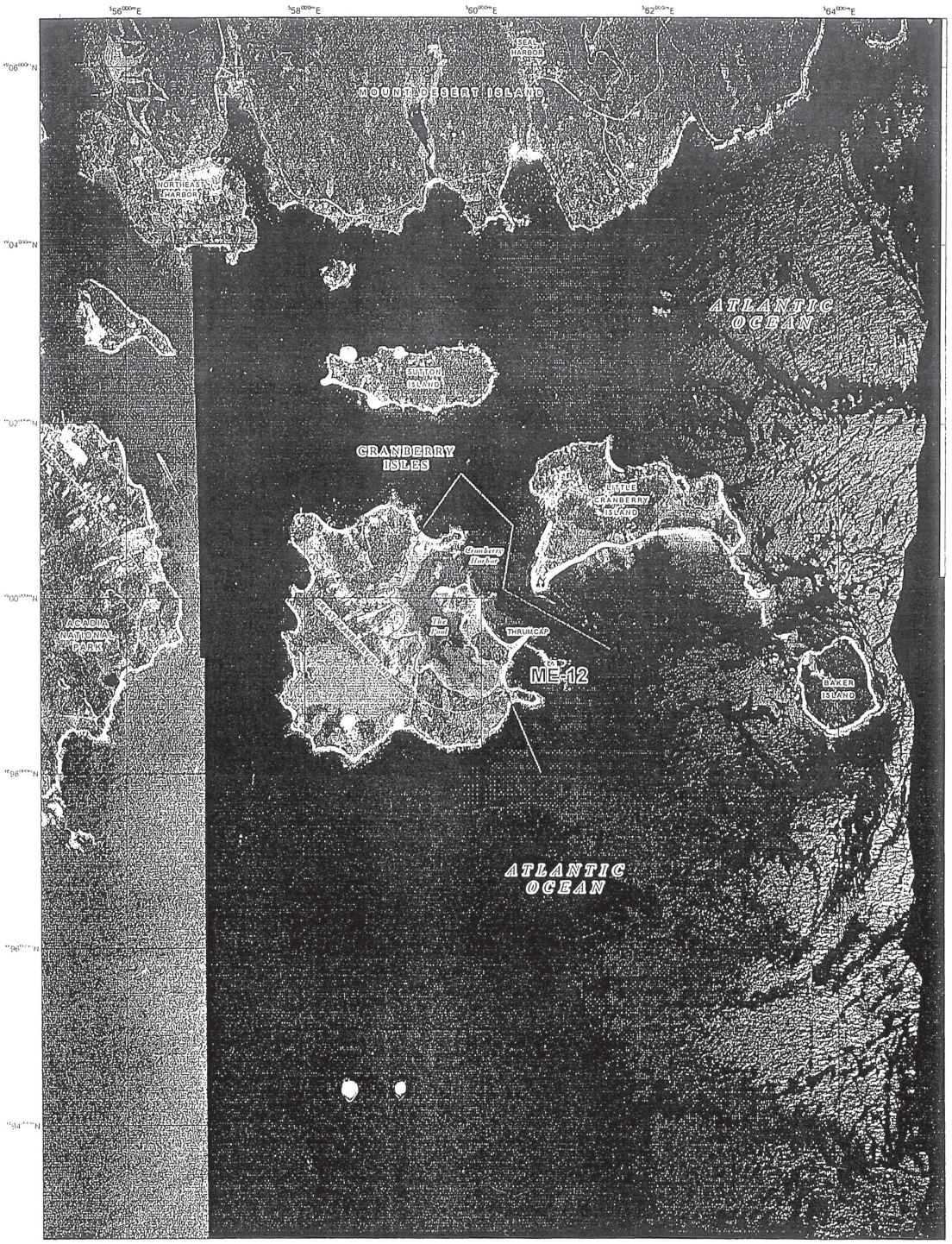

JOHN H. CHAFEE COASTAL BARRIER RESOURCES SYSTEM

This map has been produced by the U.S. Fish and Wildlife Service as authorized by Section 4(c) of the Coastal Barrier Resources Act (CBRA) of 1982 (Pub. L. 97-348), as amended by the Coastal Barrier Improvement Act of 1990 (Pub. L. 101-591). The CBRA requires the Secretary of the Interior to review the maps of the Coastal Barrier

Thrumcap Unit ME-12

System Unit Boundary

Otherwise Protected Area (OPA) Boundary. OPAs are identified on the map by the letter "P" following the unit number

Approximate State/Country Boundary

HARBOR COMMITTEE REPORT

The Harbor Committee held three meetings in 2015, July 2, September 15, and October 20.

Most discussions centered around the pier, dock, and moorings at the Islesford Harbor. The Committee continued to recommend realignment of the mooring field at Hadlock Cove due to increases in the size and number of vessels. Two moorings were moved to ease congestion at the landing float.

The committee reviewed plans for the reconstruction of the Islesford Town Dock, and made substantive suggestions for changes and improvements. It is our understanding that the resulting final plans, drawn up by Paul Pottle of Fay, Spofford, and Thorndike, will be presented in the 2016 Town report.

The Committee continues to recommend budgeting for, and installation of, hoists at both piers, Great Cranberry Island and Little Cranberry Island. We also recommend cancellation of landing rights for the S/V Surprise at the Town floats at the Manset due to conflicts with the Cranberry Cove Ferry.

Respectfully submitted,

William F. Dowling, Chair

ISLESFORD HARBORMASTER REPORT

The good weather last summer led to an increase in boat traffic. For the most part things went smoothly. There were a few complaints, mostly about congestion at the skiff floats. Most of the phone calls were to ask where visiting boats could find a mooring. I also received a few requests for placing a new mooring.

The marker between the abutments and the inner can buoy was lost last winter and did not get replaced for summer traffic. It will be back in place next summer. It has been helpful for those who aren't paying attention to their GPS.

I had to move two moorings that were too close to the Co-op and Town floats. It made a difference, but there are still mooring issues to deal with. With boats getting bigger we will have to adjust the mooring field again at some point.

Plans for the dock extension are in progress. We hope the new design will work without pushing the mooring field further out. This year has been a good example of the need for an extension. There have been times when the Sutton, which draws quite a bit more than other boats, has not been able to land at the Islesford dock. The Sea Queen has also had trouble at extreme low tides. Since we don't know what boats will be used in the future, a dock extension will enable us to be prepared for a variety of boats.

Here's hoping 2016 will be a good boating season for all.

Respectfully yours,

Bruce Fernald, Islesford Harbor Master

Great Cranberry Island Dock

Beal & Bunker Double B Mail Boat

CRANBERRY ISLES MANSET DOCKMASTER REPORT

Summer 2015 brought another good season to the Manset shore. There were eighty-one parking discrepancies requiring some research or action, down from about ninety-four last year. This continues the yearly trend of fewer parking issues. No vehicles had to be towed, although two large rental motor homes had a close call. Action on the dock and floats was routine with slips filled to capacity at times in August. In 2014 the Harbor Committee recommended budgeting for an additional thirty annual Dockmaster work hours over the last year, most of which were added. For the first time this allowed me to make consistent visits and perform work through September with a total of three hundred fifteen hours. I did some other separately funded work, including in the Code Enforcement capacity at the Manset office, which further multiplied Dockmaster presence at no additional cost. All of the worn regulatory signs on the float decks were redone and new placards that indicate depth at MLW (mean low water) were made for the sides of each float. New life rings were marked and put out, and by the time I made a new Town office sign for Islesford we had quite a paint selection on hand.

Cavities develop behind the granite block sea wall from wave action, usually over the winter. I filled washouts with sizeable jagged stone and believe this will stay in place where the smaller fill stone does not.

We had the usual handyman tasks such as installing doorknobs and locksets, and replacing a shattered shop window. The boat shop lighting remains partially operational and really should be fully restored for safety as well as efficiency.

Last year the Harbor Committee recommended a fifth 16X24 foot docking float be inserted into our existing four float system to provide needed slips on busy days. This will also allow increased space for dinghies, getting them out from under the access ramp which can cause sporadic damage and tends to traumatically remove little outboard motor covers. There were more dinghies in place at times this year than previous years. To use the Town of Cranberry Isles' moorings, one needs a dinghy preferably with a motor as the moorings are out there quite a ways.

Last year's work activity in Manset kept up into December of 2014, long after parking season. I made a temporary roof leak repair at the Marsh building and modified a large louvered attic vent over the ferry waiting room area. It was letting in wind and driving rain. One trunk of a huge three-trunked maple tree blew down out back during the first week of November in a most spectacular near miss of the building. It also crushed part of the neighbor's privacy fence that hadn't already blown over on its own.

Since two ferry boats were stored in front of the waiting room area, there was no direct access around the building to the downed tree debris with a truck or related equipment. Then the November snow came and that project was halted until May 2015 when K.M. Harper's Tree

Service took down the remaining trunks and a big spruce that was on its last legs. Once the ferry boats were launched I cut and hauled out the wood well into June, at no cost to the Town.

The Manset facility was not occupied last winter as in the past. H.G. Reed winterized the plumbing. This task should definitely be left to a plumber / boiler tech as there are some complexities in the old place, especially with the aged heating system (which does contain antifreeze tested to a marginal -10 degrees F). Special fittings, a compressor, and removal of the backflow preventer and water meter are required. The Town of Southwest Harbor Water Department shuts off the curbside water valve.

The bluestone chimney cap and some bricks blew off the chimney over the winter. The mortar had worn away over the decades and let go. Intending to rebuild the top over the summer, we temporarily restacked the bricks and set the cap with a cement block on top to hold it in place.

The most significant parking violations are from people who assume the Manset Lot is for nonresident day trippers using the ferry. They either miss or just don't believe our entrance sign that clearly states otherwise. Two rental motor homes from Florida usurped four assigned resident spaces. Our towing company had a waiting list that day and the tourists arrived to move their motor homes ahead of the tow truck. There was another truck and camper trailer that appeared and was removed once the owners were contacted. Bob Brown at the Manset Yacht Service generally allows campers and trailers in his lot next door and is the one to contact for visitors arriving with more than a regular passenger vehicle.

There were a few dead car and boat batteries this year. Often I can get them going with a jump pack or battery charger. When there's no hope for that, Skip's Auto Service can usually promptly deliver and install a new battery. We had a vehicle with the key locked inside. Skip's mechanic came quick, defeated the lock, shut off the alarm, and the owner was on her way, probably not too far behind schedule. Bob Brown responded to a dead boat battery at our floats and jump started it when I was not available. Yes, the way things should be.

The 80 foot ramp and gangway to the floats fell in during a little easterly gale. Chalmers Enterprises had it back in place early the next morning. A front section of the ADA (Americans with Disabilities Act) compliant handrail broke off leaving a protrusion (since taped and padded) and should be repaired before next season. Chalmers Enterprises would most likely take the ramp to their facility since an inert gas shielded welder: MIG/TIG is required to weld aluminum and is challenging outside in the wind. However, a contractor with portable equipment may be able to do the repair in place on a calm day with a makeshift wind screen.

We had a squatter spending several nights in the waiting room. Not a typical vagrant, this brought his own large video monitor, internet streaming capabilities, full X-box set up and some culinary magazines to go with his snacks. Kids thought the X-box was a new thing for our

waiting customers. I'd say after realizing that people pass through the waiting room at all odd hours of the night, the squatter went elsewhere.

One morning around low tide I noticed a real nice laptop computer laying on the sea floor beside the first mooring float, (royal bummer). I managed to extract it using a broom, shovel and basket then put out a notice and the owner claimed it. Despite being submerged for about a week, a computer shop was able to retrieve the data from the hard drive.

That's a little bit of another year at the Manset transportation facility. I'm looking forward to the next one. Thanks for all your support.

Respectfully submitted,

Dennis Dever, Manset Dockmaster

LOCAL HEALTH OFFICER (LHO) REPORT

Exciting news from the desk of your local Health Officer; this year I was appointed to the position of L.H.O. for the next three years. I am honored and look forward to the next few years working in this position. With that big news out of the way I will get to the "behind the scenes" stuff. This past year I worked with establishing a better working relationship with the folks that I need to report to within the state of Maine. It is so nice to know that there is a team behind me and that help is just a call away. Like I have said in the past, I don't have the answers, but I know who I can call. I have also trained this past year in Lyme disease and Hoarding. These are big topics within the state of Maine and it is nice to see that these trainings are in place to help us L.H.O.'s have a toolbox to help folks.

Again, I would love to remind residents of the Cranberry Isles that I have five primary job roles as the Local Health Officer:

1. Offer health information and resources to the community.
2. Off mediation and problem-solving in the resolutions of complaints.
3. Investigator and enforcer of complaints that cannot be resolved.
4. Report to and inform the Board of Selectmen on the community's profile.
5. Work closely with the Department of Health and Human Services Public Health District Liaisons.

As a town we have an amazing community health system in place. I am proud to be a part of that team.

As for a goal for 2016, I would like to create a template for the Community Profile. This will be beneficial for myself, the Board of Selectmen and for future L.H.O.'s in our town.

So here is to a healthy, happy 2016 in our community!

Respectfully submitted,
Cari Alley

CRANBERRY ISLES HEALTH COMMITTEE (CIHC) REPORT

The Cranberry Isles Health Committee (CIHC) is committed to meeting the health needs of the Cranberry Isles community.

The Tel-e-med clinic is open for appointments and talks with the support of the Maine Sea Coast Mission and the Islesford Neighborhood House Association (INHA). Our Staff is happy to help you set up an appointment with the clinic in Southwest Harbor or another clinic if Southwest Harbor is busy. We are located in the Ladies Parlor of the Islesford Neighborhood House. Residents from Great Cranberry will be provided a punch on the Beal and Bunker Ferry if they wish to use the Tel-e-med clinic. All appointments are confidential.

2015 has been another busy year for the CIHC. Islesford hosted the dentist in the spring and fall this year. Both islands hosted flu clinics. We have used the Tel-e-med equipment to host talks on the following subjects: Alternative Medicine, Helping Elders Age in Place, Matter of Balance, Nutrition, Emergency Preparedness, Marijuana Education, and Anxiety.

The Cranberry Isles sent three people to the annual Eldercare Conference on Islesboro which is hosted by the Maine Sea Coast Mission. This conference, as always, inspires us to find ways to keep elders on-island and in their own homes and affirms the initiatives that are already in place. One example is providing meals for ailing elders.

Great Cranberry has its Island Cooks program. Volunteers make meals once every other week during the winter. It is appreciated not only for the wonderful meals, but for the companionship offered by the cooks themselves.

We still have not given up on having our islands connected so people who wish to attend the Tel-e-med talks can do so from their own island without the ferry ride.

The CIHC hopes to assist our community with any health concerns. Please contact any member of the committee to share ideas for future clinics, talks, and services.

The CIHC is very thankful to the Maine Sea Coast Mission, Sharon Daley, the Maine Seacoast Mission nurse, the INHA, and the Town of Cranberry Isles for their ongoing support.

Respectfully submitted,

Cynthia Thomas, Stefanie Alley, Jasmine Samuel, Karin Whitney, Ingrid Gaither, Jen Walls, Thomas Powell, Rebecca Powell, Serena Spurling Brumaghim, Joy Sprague, Sally Rowan, and Ann Fernald

ANIMAL CONTROL OFFICER (ACO) REPORT

I think that if you ask any animal owner why they have animals they will probably answer that they like company. I fell this way most of the time! Animals are amazing companions. They have great personalities and bring some craziness to one's life. But, animals also bring a lot of work and costs! Most animals are dependent on their owners for food, shelter and water. It is the job of the human to take care of the animals' needs.

This past year showed me one of the most important aspects of being an Animal Control Officer…The Humane Agent call. AS an A.C.O., I am the front lines for fielding whether or not an animal is in danger or is being neglected. We also have a duty to keep the community safe from dangerous animals. If there is a neglect issue or animals are being abused, we need to report it to our superiors in Augusta. This summer I learned how and what happens on an Animal Hoarding with Neglect call. I was one of the two calls made to the Humane Agent this past year regarding animals on the Cranberry Isles. While I was completely embarrassed and offended that a community member felt that I was hurting my animals, I was glad to walk through the steps from the inside. You can only learn so much from the classroom setting. To be thrust into the situation you get real hands on experience. I feel blessed to have gone through it all. The Humane Agent was a presence on both islands this summer.

As for learning opportunities this past year, I was able to attend our yearly training in Bangor. It is a wonderful opportunity to meet with other A.C.O.'s, as well as learn about important topics that are happening in Maine. One topic I found interesting was Feral Pigs in Maine. Who knew! Another opportunity I had was to take a class associated with the ASPCA on Blood Sports. This was one of the most difficult classes to sit through. Visual images and abuse these animals face is deplorable. As an A.C.O., we need to see these images so that we know what to look for, but it never makes it easier. One of the instructors repeated "You are their voice!" That is powerful.

Of course, one of the most placed calls is "dog-at-large" here on the Cranberry Isles. We are very lucky that so far in the community that we work together to make sure we find where the dog goes before tragedy strikes; which leads into my constant harping of how important it is to register your dog in the town where you live as well as where you summer. The cost is kept low to help with this situation. If a dog is picked up running and is not registered with the Town, the dog needs to be brought to a shelter. Our shelter is in Ellsworth. That is a lot of pain and costs to avoid the six dollar fee (eleven dollars for not spayed or neutered) to register your dog with our town.

I look forward to all the calls and conversations I have with folks about animals and animal issues. The Pet Pantry seems to have had a successful first year. Of course I will always accept donations for dog and cat food to help offset the costs. This summer I hung banners on both Great Cranberry and Islesford stating the leash law. I look forward to hanging these again this summer. They seemed to help a little with the foot traffic we see from the day trippers.

I look forward to 2016 and what it is going to bring. I am excited about the learning opportunities and networking. I hope to work on trying to get a Rabies Clinic out here in the fall and purchasing a Universal Scanner for microchips placed in dogs and cats. I would love to hear more community input on things that might be needed or desired. Remember I can't make a dog stop barking, I can only talk to the owners about meeting the needs of the dog so it is less likely to bark.

Thank you for the opportunity to serve our community in this aspect!

Respectfully submitted,
Cari Alley, A.C.O.

ISLESFORD CONSTABLE REPORT

I am pleased to report that 2015 marked one of the quietest years to date in my ten years as Constable. The winter is typically very slow with the exception of helping Cory Alley keep the Town parking lot clear so he can effectively plow. Summer is when I usually start to receive the late night phone calls, but this summer was relatively quiet and I was able to get all of my beauty sleep on most nights.

The majority of complaints that I received were about children operating golf carts or motor vehicles on Town roads that were under the age of sixteen or who didn't possess a valid driver's license. In all of the cases I was able to speak with the child or parent and resolve those issues without incident. A lot of times the violators are families renting houses who don't realize that even out here on the ends of the earth we still follow the law and a child must be sixteen to operate a golf cart on public roads. It would be helpful if landlords who routinely rent houses could explain this to their tenants if they plan on providing a golf cart. It may seem minor but it is a public safety issue and I will continue to enforce it.

The other thing that has been an ongoing issue every year and seems to be getting worse is the congestion at the Town dock parking lot. There are more vehicles than ever before on the island but with everybody's help I believe we can still keep the parking organized and accessible. It is the first thing people see when they get off the boat; do we really want it to look like a junkyard? A lot of vehicles get left in the parking lot from Memorial Day until the 4th of July; the easiest solution is to arrange for your caretaker to bring your vehicle back to your house. Or if you are planning on going away for a week, arrange for a friend or neighbor to give you a ride to the dock. The parking lot should only be for service vehicles or people going off island for less than 72 hours. By working together we can keep this island beautiful.

As always I was proud to serve the town in 2015 and look forward to another quiet, safe year in 2016. Thanks.

Respectfully submitted,
Richard Howland, Constable Islesford

GREAT CRANBERRY ISLAND & SUTTON ISLAND CONSTABLE REPORT

Two subjects dominated law enforcement action this year: personal safety related to driving speed on the roads and respect for personal property.

On Great Cranberry we had several accidents involving driving speeds greater than the 15 MPH speed limit established by the Board of Selectmen. While the majority of these involved hitting deer or leaving the road and entering a ditch, the worst was a collision between an automobile and a young boy on a bike. While only scrapes and scratches resulted, neither participant was paying attention to their immediate environment. Just because it's an island, you still have to be observant of small children and animals on the roads, as well as tourists who believe they must walk down the middle of the road, regardless of traffic coming and going. Drive safely!

Regarding personal property I regret that a number of deer hunters failed to show any respect for the homes and property of our Sutton Island residents. Several homes were broken into and used as hunting lodges while pursuing deer this past fall. In two cases furniture and food was removed to campfire pits in front of the homes, along with chairs and dining materials. Having suspicions on the culprits doesn't produce a conviction in court and I encourage everyone who leaves a home unoccupied for six or more months to consider having a caretaker who could visit periodically and represent your interest in the property.

While the Cranberry Isles does not have an organized Police Department for law enforcement, I believe the Constables have continued to work successfully with the public in ensuring registration of automobiles and keeping dogs on a leash, both of which are mandated by State law. Leaving unregistered automobiles at the Town landings, however, has again been a problem and I remind all that leaving a vehicle for more than two weeks on a public way or parking lot can initiate its removal by action of the Board of Selectmen. Public law enacted specifically for the outer islands has addressed this issue and I have used it on several occasions for abandoned vehicles.

Thank you for respecting your neighbors, private property and driving speeds.

Respectfully submitted,
Richard Beal, Constable

Pauline Bunker, Great Cranberry Island resident enjoying a day off island.

Parade, Great Cranberry Island

PUBLIC SAFETY 5 YEAR PLAN

The following is a work and expense outline for the Islesford Volunteer Fire Department (IVFD) and Great Cranberry Island Volunteer Fire (GCIVFD). The plan is subject to change based on on-going needs assessments and funds available. The main goal for the departments is to combine and become one department that serves the Town of Cranberry Isles with two stations as well as duplicating equipment between the islands.

2015

- Comprehensive training program adopted for both island departments. To be modeled after Maine Firefighter 1 standards.
- Equipment replacement schedule (bunker gear)
- 501c3 non- profit status – In progress for both auxiliary departments (IVFD / GCIVFD)
- GCIVFD facility improvement schedule
  - Town Attorney advice on possibility of modifying existing station based on deeds.
    - Heat Pump Installed using private funds
    - Insulation upgrades using private funds (Early 2016)
- IVFD Cistern Installed

2016

- Dry Hydrant installed in fire pond on GCI
- PPC 9 Rating- Community Survey Re-Evaluation (LCI)
- Roster revisions to include core members.
  - Policies in place to require members to attend trainings to remain on the dept.
- Town Attorney advice on logistics of combining FD's.
- Town Attorney advice on repayment policy for training.
- Accountability & FF/ CIRS #'s sorted
- Job descriptions
  - 3-4 designated tasks per member
- Application & medical testing completed.
- GCI- Town funded truck replacement
  - NFPA standards on replacement
  - 2016 International chassis to match Islesford
  - Pumper 970 gallon tank
  - 1972 Green Chevy to be replaced first
- NIMS compliance by end of year to allow for more federal grants.
- Repeater installed for all public safety depts. in TCI.
- Basic Pump operators course on Islesford (most likely)

2017

- 4 Interior FF's by July 1, 2017 (FOR TCI)

- Air supply trailer/ Cascade @ each dept.?
- Air-Pack Upgrades for GCI to match LCI/ LCI new bottles
- PPC 9 Rating- Community Survey Re-Evaluation (GCI)

- Sutton Island:
    - Gator type vehicle on island to allow for transportation of pumps/ equipment/ personnel.

2018

- LCI- Wildland/ Brush Truck (Ford F350 w/ skid unit)

2019

- Duplicate 2016 truck for GCI

2020

- Duplicate LCI Wildland/ Brush Truck for GCI
    - Constant recruitment (liquid funds for training)
    - Continued private fund raising for both islands.
    - Continued grant search for both islands.

As always, please feel free to contact me, Katelyn Damon, if you have questions about this 5 year plan or any other public safety questions.

Respectfully Submitted,
Katelyn Damon, Town of Cranberry Isles Public Safety Coordinator
katelyn@cranberryisles-me.gov 207-479-8118

FIRE DEPARTMENT REPORT

2015 marked another extremely successful year for the Islesford Volunteer Fire Department (IVFD). One of the biggest handicaps of our department has always been access to fresh water. It is kind of ironic since we live on an island surrounded by water. While it is true that we can fight a fire with salt water, it is extremely corrosive and damages our trucks and equipment. It is also not as easily accessible as one might think, not to mention all of the seaweed and debris that get sucked into the pump while drafting. We took all of this into account, as well as looking at all of our other options, which were basically limited to a handful of dug wells that could provide us with two thousand gallons at the very most and then needed a day to refill. We determined that the best answer was an underground cistern. After approval at the Town meeting last March, the project took off. By late September the tank was in the ground; it holds twenty one thousand gallons of accessible water. The project would never have been possible without the help of our entire department volunteering countless hours, but especially Katelyn Damon. Jim Amuso and Jason Pickering were on site every day to make sure it was going smoothly. I would also like to give a special thanks to Goodwin's Construction, without them this never would have been able to happen.

Another major achievement for our department has been the working relationship with the Great Cranberry Island Volunteer Fire Department. I am now chief of both departments and we have begun trainings monthly between islands to familiarize each other with the trucks and equipment of each department. There is a lot to think about when combining departments; we plan to approach it with poise and diligence.

Congratulations to Katelyn Damon, Tom Powell and Jake Kuester who completed fire academies this spring. Tom studied at the Bucksport Academy because of his work schedule. He is a member of both the Great Cranberry Island and Islesford Departments and will be a valuable asset to both. Jake and Katelyn graduated from the Hancock County Fire Academy. They are both certified interior firefighters. Katelyn is also a pro-board certified firefighter. I would like to thank her for the relentless work she puts in both on and off the clock, without her none of what we have accomplished would have been possible.

My goal for 2016 is recruitment. On Islesford we have a solid core of well-trained fire fighters, but it has been a challenge getting new people to join. If you are an able bodied man or woman, there is no excuse not to volunteer. I would almost consider it your civic duty. We don't have the luxury of fast mutual aid response from other towns. The more well-trained people we have, the easier it will be to protect lives and property.

I would like to thank everyone who has supported our department. I look forward to a safe and productive year in 2016.

Respectfully submitted,

Richard Howland, Chief

GREAT CRANBERRY ISLAND VOLUNTEER FIRE DEPARTMENT

The Great Cranberry Volunteer Fire Department (GCIVFD) is working hard to improve fire coverage on Great Cranberry Island. We have added two interior certified fire firefighters to our ranks. This spring Jake Kuester completed the Hancock County Fire Academy, and Tom Powell completed the Bucksport Fire Academy. Attending Fire Academy is a time-consuming act of dedication, requiring mental and physical preparation, skill and strength. We cannot thank our members enough for their dedication to training, taking time out of their busy family lives to learn and practice vital fire service skills.

The department has grown, adding members from the new residents on the island. In addition we have started working closer with the Islesford Volunteer Fire Department in training and leadership. This has led us to adopt an inter-department training program based on Maine Fire Fighter 1 standards. We have had training with pumps and operations, scene-size up and response, and even participated on Islesford with interior blind search (using wax paper over the masks of interior fire fighters to emulate a smoke-filled building).

This year's annual meeting saw the appointment of Richard Howland of Islesford as Chief. His years of experience will allow us to continue our process of improving fire coverage on Great Cranberry.

The improvements in training and membership have revealed several needs, particularly our aging fire trucks. We have two pumpers, our 1972 Chevrolet and our 1981 International. The older truck, with manual steering and inadequately small tank and pump, is beyond its useful life-expectancy and unable to pass a pump test.

It is our hope to eventually achieve an ISO class 9 rating, which demonstrates a minimum standard of protection to life and property. In pursuit of this goal, we hope to replace our aging 1972 pumper. We believe a new truck matching the specifications with the newest Islesford pumper would allow us to provide the best fire coverage for our islands. We also understand that such a request comes at a financial cost to our community. We come this year asking the voters of the Cranberry Isles to support the purchase of a new pumper because we believe that it is the best option for Great Cranberry's fire coverage.

While training and equipment are vital parts of fighting fire, there is no replacement for prevention and education. Please know that the GCIVFD offers smoke detectors for anyone who needs one. Also, we can provide a home fire safety survey to help homeowners in fire planning as well as fire extinguisher training to help familiarize residents in the event of a fire. Owners of wood stoves should make sure that chimneys are cleaned regularly and everyone should make sure to check their smoke alarm batteries monthly and replace them yearly. Open fire permits are available online or from our Fire Warden, Norman Sanborn, II.

Thank you to the Town of Cranberry Isles and all our supporters for helping us improve fire coverage on Great Cranberry Island. We look forward to continuing our hard work and progress in the next year.

Respectfully Submitted, Thomas Powell, President

TOWN OF CRANBERRY ISLES
ISLESFORD, ME
QUOTE 74501

COMMERCIAL 36 PUMPER

INTERNATIONAL 4400 2DR CAB 4X2 CHASSIS

THIS DRAWING IS FOR REFERENCE PURPOSES. ALL DIMENSIONS ARE SUBJECT TO MINOR VARIATIONS DUE TO MANUFACTURING PROCESSES.

This print is the property of E-ONE, Inc. and is loaned to you subject to return on demand, unless otherwise agreed to in writing by E-ONE, Inc. Its contents are confidential and must not be copied or submitted to third parties for use or examination.

CONCEPT DRAWING
FOR DISCUSSION PURPOSES ONLY

1250 GPM HALE QFLO PUMP
1000 GALLON WATER TANK
30 GALLON INTEGRAL "A" FOAM CELL

HOSE LOAD:
NFPA CAPACITY

COMPT.	OPENING		INTERIOR DIMENSION			
L1	36W	68H	36W	34H	12D	UPPER
			36W	30H	26D	LOWER
L2	56W	34H	56W	34H	12D	
L3	50W	68H	36W	34H	12D	FRONT UPPER
			36W	30H	26D	FRONT LOWER
			14W	34H	10D	REAR UPPER
			14W	30H	25D	REAR LOWER
R1	36W	30H	36W	30H	26D	
R3	50W	30H	36W	30H	26D	FRONT
			14W	30H	25D	REAR
B1	36W	46H	38W	25H	25D	UPPER
			38W	30H	26D	LOWER

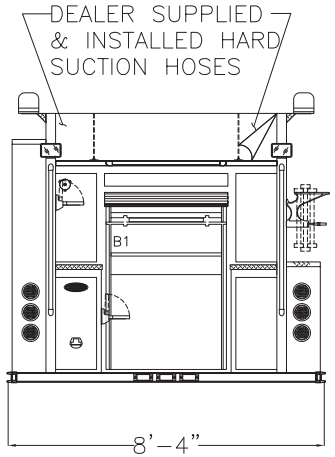

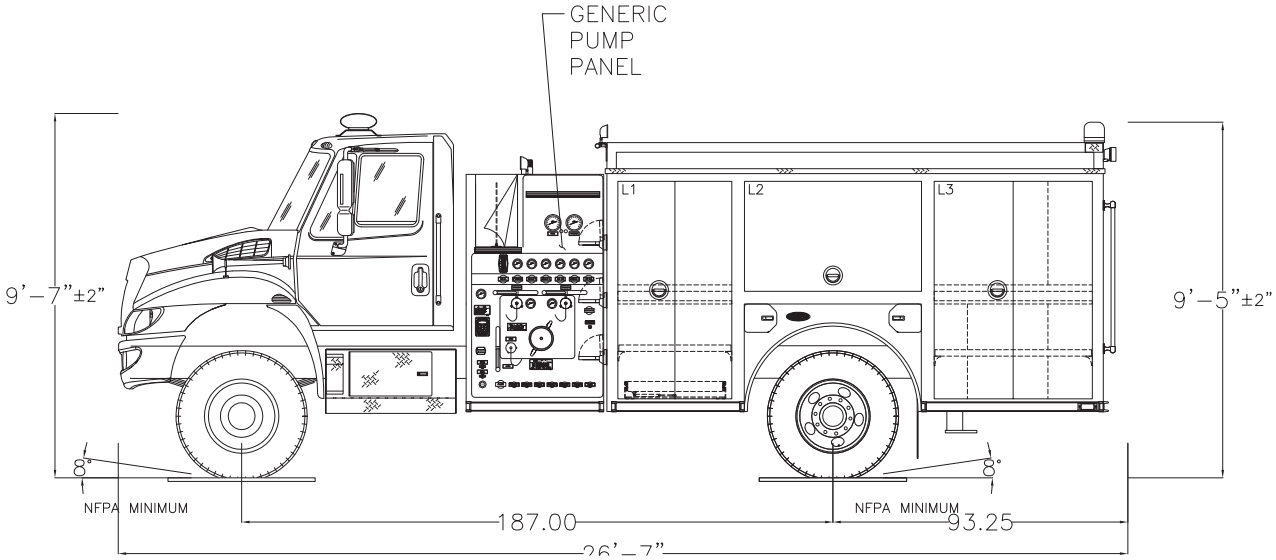

TOWN OF CRANBERRY ISLES

ISLESFORD, ME

QUOTE 74501

COMMERCIAL 36 PUMPER

INTERNATIONAL 4400 2DR CAB 4X2 CHASSIS

THIS DRAWING IS FOR REFERENCE PURPOSES. ALL DIMENSIONS ARE SUBJECT TO MINOR VARIATIONS DUE TO MANUFACTURING PROCESSES.

This print is the property of E-ONE, Inc. and is loaned to you subject to return on demand, unless otherwise agreed to in writing by E-ONE, Inc. Its contents are confidential and must not be copied or submitted to third parties for use or examination.

CONCEPT DRAWING
FOR DISCUSSION PURPOSES ONLY

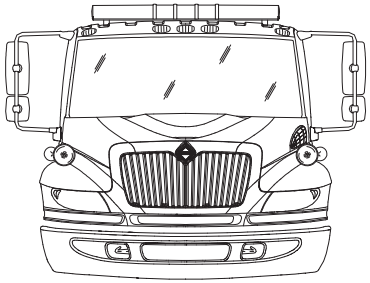

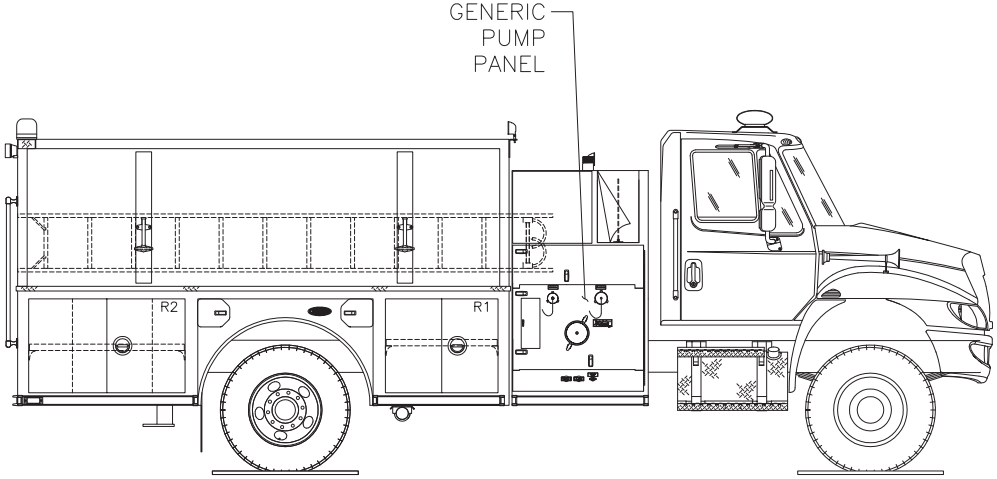

CRANBERRY ISLES RESCUE SERVICE (CIRS) REPORT

2015 was a busy year for the Cranberry Isles Rescue Service. The service responded to twenty-five requests for assistance which is our busiest year to date. August was our busiest month; we responded to eleven Emergency Medical Service (EMS) calls.

I am incredibly grateful for our wonderful EMS staff on Great Cranberry and Islesford who helps share the responsibilities of carrying radios and responding to calls.

I would like to thank the following Cranberry Isles Rescue Service Emergency Medical Technicians (EMT's) for all of their hard work in 2015: Luke Abell, Cory Duggan, Peyton Eggleston, Paul Fernald, Margaret Houghton, David Rackliff, Kelly Sanborn, Mary Schuch, Hugh Smallwood and Emily Wright.

I would also like to thank the boat captains who transport us to Northeast Harbor at all hours of the day and our faithful ambulance driver on Great Cranberry, Mark Alley.

Without all of your help our jobs would be impossible. We all truly love our work, however stressful it may be at times. We are appreciative of the support the community continually gives us. We look forward to serving your needs in 2016!

Respectfully submitted,

Katelyn Damon, Cranberry Isles Rescue Service Chief

Photo Courtesy of Katelyn Damon

TOWN OF CRANBERRY ISLES
ANNUAL TOWN MEETING
THE WARRANT 2016

State of Maine
County of Hancock, §

To: A Constable of the Town Of Cranberry Isles, in said County

Greetings:
In the name of the State of Maine you are hereby required to notify and warn the inhabitants of the Town Of Cranberry Isles, qualified to vote in Town affairs, to meet at the Islesford Neighborhood House, in said town, on the 12th day (Second Saturday) of March AD 2016 at 8:30 A.M. to act on the following articles, to wit:

Article:

1. To elect by ballot a Moderator to preside at said meeting.

2. To elect by ballot a Town Clerk for the ensuing year and to vote compensation.

   Recommended: **$ 7,000** *Note: 2015 Amount was $ 6,825*

3. To see if the voters of the Town Of Cranberry Isles will approve the use of the Maine Municipal Association's recommended Maine Moderator's Manual "Rules of Procedures" for the conduct of this Town Meeting.

4. To see if the voters of the Town Of Cranberry Isles will approve opening the floor of this Town Meeting to all non-registered persons for the purpose of discussion only on each of the following articles of this 2016 warrant.

5. To elect by ballot a Selectman for the term of three years. (Term expiring: Richard Beal)

   Ballot: _____ (term expiring 2019)

6. To vote compensation for all the Selectmen for the ensuing year.

   Recommended: **$ 8,000** for the chairperson, **$ 7,500** for others.

   Note: No change from 2015

7. To elect by ballot a Town Treasurer for the ensuing year and to vote compensation.

Recommended: **$ 10,000** *Note: 2015 Amount was $ 9,975*

8. To elect by ballot a Collector of Taxes and Collector of Excise Taxes for the ensuing year and to vote compensation.

Recommended: **$ 28,000** *Note: 2015 Amount was $ 25,725*

9. To elect by ballot a member of the Superintending School Committee for a term of three years. (Term expiring: Amy Palmer).

For information of the voters, the elected membership of this committee is:

Name	Island	Term expires
Kelly Sanborn, Chairman	Great Cranberry	2017
Cari Alley	Little Cranberry	2018
Amy Palmer	Little Cranberry	2016

10. To elect by ballot a member of the Municipal Advisory Commission, which consists of seven elected volunteer property owners or registered voters of the Town of Cranberry Isles, who shall serve a period of three years each. (Term expiring: Ronald Axelrod).

For information of the voters: The elected membership of this Committee is:

Name	Island	Term expires
Cory Duggan, Chairman	Little Cranberry	2016
Ronald Axelrod	Little Cranberry	2016
Jasmine Samuel	Little Cranberry	2016
Ingrid Gaither	Great Cranberry	2017
Karin Whitney	Great Cranberry	2018
Joanne Thormann	Little Cranberry	2018
Chris White	Great Cranberry	2016

Ballot: _____ (term expiring 2019)

11. To elect by ballot a member of the Municipal Advisory Commission, which consists of seven elected volunteer property owners or registered voters of the Town of Cranberry Isles, who shall serve a period of three years each. (Term expiring: Cory Duggan).

Ballot: _____ (term expiring 2019)

12. To elect by ballot a member of the Municipal Advisory Commission, which consists of seven elected volunteer property owners or registered voters of the Town of Cranberry Isles, who shall serve a period of three years each. (Term expiring: Chris White).

    Ballot: _____(term expiring 2019)

13. To elect by ballot a member of the Municipal Advisory Commission, which consists of seven elected volunteer property owners or registered voters of the Town of Cranberry Isles, who shall serve a period of three years each. (Term expiring: Jasmine Samuel who was appointed to replace Katelyn Damon, whose term would have expired in 2017).

    Ballot: _____ (term expiring 2017)

14. To vote the hourly rate of pay for Town Officials and Employees

    Recommended: **$12 to $25**, at the discretion of the Board of Selectmen, based on the type of work performed. *Note: no change from 2015*

15. To see if the voters of the Town Of Cranberry Isles will vote to collect interest at the rate of seven percent (7%) APR on all 2016 taxes not paid by December 01, 2016. Municipalities may, by vote, determine the rate of interest that shall apply to taxes that become delinquent during taxable year 2016 until those taxes are paid in full. The maximum rate of interest that can be charged per Title 36, MRSA §505.4 is seven percent (7%) APR.

16. To see if the voters of the Town Of Cranberry Isles will vote to allow a two percent (2%) discount on all taxes which are paid in full within thirty (30) days of the date shown on the original bill as submitted by the Tax Collector.

17. To see if the voters of the Town Of Cranberry Isles will vote to authorize the Treasurer to expend funds in January 2017, February 2017, and March 2017 equal in aggregate to three twelfths (3/12ths) of the Operator's Budget approved for the Year 2016. This authorization will permit the Treasurer to prepare Financial Warrants for approval by the Board of Selectmen, prepare checks, and legally pay bills pending approval of the entire Operations Budget by the Voters in March 2017.

SCHOOLS (18A – 18R)

CRANBERRY ISLES SCHOOL DEPARTMENT

Note: Articles 18A through 18K authorize expenditures in cost center categories

18A. To see what sum the School Committee is authorized to expend for **Regular Instruction** for the fiscal year beginning July 1, 2016 and ending June 30, 2017.

School Committee recommends **$ 273,728**

Note: 2015-16 Amount was $ 274,541

18B. To see what sum the School Committee is authorized to expend for **Special** Education for the fiscal year beginning July 1, 2016 and ending June 30, 2017.

School Committee recommends **$ 53,427**

Note: 2015-16 Amount was $ 48,838

18C. To see what sum the School Committee is authorized to expend for **Career and Technical Education** for the fiscal year beginning July 1, 2016 and ending June 30, 2017.

School Committee recommends **$ -0-**

Note: 2015-16 Amount was $ -0-

18D. To see what sum the School Committee is authorized to expend for **Other Instruction** for the fiscal year beginning July 1, 2016 and ending June 30, 2017.

School Committee recommends **$ 10,505**

Note: 2015-16 Amount was $ 6,969

18E. To see what sum the School Committee is authorized to expend for **Student & Staff Support** for the fiscal year beginning July 1, 2016 and ending June 30, 2017.

School Committee recommends **$ 24,469**

Note: 2015-16 Amount was $ 23,826

18F. To see what sum the School Committee is authorized to expend for **System Administration** for the fiscal year beginning July 1, 2016 and ending June 30, 2017.

School Committee recommends **$ 16,084**

Note: 2015-16 Amount was $ 14,631

18G. To see what sum the School Committee is authorized to expend for **School Administration** for the fiscal year beginning July 1, 2016 and ending June 30, 2017.

School Committee recommends **$ 34,383**

Note: 2015-16 Amount was $ 33,010

18H. To see what sum the School Committee is authorized to expend for **Transportation & Buses** for the fiscal year beginning July 1, 2016 and ending June 30, 2017.

School Committee recommends **$ 47,600**

Note: 2015-16 Amount was $ 42,950

18I. To see what sum the School Committee is authorized to expend for **Facilities Maintenance** for the fiscal year beginning July 1, 2016 and ending June 30, 2017.

School Committee recommends **$ 51,919**

Note: 2015-16 Amount was $87,555

18J. To see what sum the School Committee is authorized to expend for **Debt Service and Other Commitments** for the fiscal year beginning July 1, 2016 and ending June 30, 2017.

School Committee recommends **$ 71,031**

Note: 2015-16 Amount was $ 71,031

18K. To see what sum the School Committee is authorized to expend for **All Other Expenditures** for the fiscal year beginning July 1, 2016 and ending June 30, 2017.

School Committee recommends **$ -0-**

Note: 2015-16 Amount was $ -0-

Note: Articles 18A – 18K authorize a total budget of $ 583,146
Note: 2015-16 Total Budget was $ 603,351

Hand Count Required

Note: Articles 18L, 18M & 18N raise funds for the Proposed School Budget

18L. To see what sum the voters of the Town of Cranberry Isles will appropriate for the total cost of funding public education from kindergarten to grade 12 as described in the Essential Programs and Services Funding Act **(Recommend $ 145,080)** and to see what sum the voters of the Town of Cranberry Isles will raise as the Town's contribution to the total cost of funding public education from kindergarten to grade 12 as described in the Essential Programs and Services Funding Act in accordance with the Maine Revised Statutes, Title 20-A, section 15688 for the period July 1, 2016 to June 30, 2017.

School Committee recommends **$ 131,603**

Explanation: The Town of Cranberry Isles' contribution to the total cost of funding public education from kindergarten to grade 12 as described in the Essential Programs

and Services Funding Act is the amount of money determined by state law to be the minimum amount that a municipality must raise in order to receive the full amount of state dollars.

Hand Count Required

18M. To see what sum the voters of the Town of Cranberry Isles will raise and appropriate for the annual payments on debt service previously approved by the legislative body for non-state-funded school construction projects, non-state funded portions of school construction projects and minor capital projects in addition to the funds appropriated as the local share of the Town of Cranberry Isles' contribution to the total cost of funding public education from kindergarten to grade 12 for the period July 1, 2016 to June 30, 2017.

School Committee recommends **$ 71,031**

Explanation: Non-state-funded debt service is the amount of money needed for the annual payments on the Town of Cranberry Isles' long-term debt for major capital school construction projects and minor capital renovation projects that are not approved for state subsidy. The borrowing of this long-term debt was approved by the voters on March 15, 2014.

Written Ballot Vote Required

18N. To see what sum the voters of the Town of Cranberry Isles will raise and appropriate in additional local funds for school purposes **(Recommend: $ 305,354)** for the period July 1, 2016 to June 30, 2017, which exceeds the State's Essential Programs and Services allocation model by **(Recommend: $ 302,085)** as required to fund the budget recommended by the school committee.

The School Committee recommends **$ 305,354** for additional local funds and gives the following reasons for exceeding the State's Essential Programs and Services funding model by **$ 302,085**: The State funding model underestimates the actual costs to fully fund the 2016-2017 budget.

Explanation: The additional local funds are those locally raised funds over and above the Town of Cranberry Isles' local contribution to the total cost of funding public education from kindergarten to grade 12 as described in the Essential Programs and Services Funding Act and local amounts raised for the annual payment on non-state funded debt service that will help achieve the Town of Cranberry Isles' budget for educational programs.

Note: Articles 18L, 18M & 18N raise a total town appropriation of **$ 507,988**
Note: 2015-16 Total Town Appropriation was $ 521,222

Hand Count Required

Note: Article 18O summarizes the proposed school budget and does not authorize any additional expenditures

18O. To see what sum the voters of the Town of Cranberry Isles will authorize the School Committee to expend for the fiscal year beginning July 1, 2016 and ending June 30, 2017 from the Town's contribution to the total cost of funding public education from kindergarten to grade 12 as described in the Essential Programs and Services Funding Act, non-state-funded school construction projects, additional local funds for school purposes under the Maine Revised Statutes, Title 20-A, section 15690, unexpended balances, tuition receipts, state subsidy and other receipts for the support of schools.

School Committee recommends **$ 583,146**

Note: 2015-16 Total Budget was $ 603,351

18P. In addition to the amount in Articles 18A – 18O, shall the School Committee be authorized to expend such other sums as may be received from federal or state grants or programs or other sources during the fiscal year 2016-2017 for school purposes provided that such grants, programs or other sources do not require the expenditure of other funds not previously appropriated?

Current Year Totals: $ 18,489 School Committee recommends passage.

18Q. To see if the voters of the Town of Cranberry Isles will authorize the school committee to have the Ashley Bryan School remain open for the 2016-2017 school year with an unknown projected enrollment.

School Committee recommends passage.

18R. To see if the voters of the Town of Cranberry Isles will authorize the school committee to have the Longfellow School remain open for the 2016-2017 school year with a projected enrollment of approximately seventeen students.

School Committee recommends passage.

19. To see if the voters of the Town Of Cranberry Isles will vote to authorize the Municipal Officers to appropriate and expend up to sixty-seven thousand seven hundred dollars ($ 67,700.00) to continue the Cranberry Isles Commuter Ferry Service, a portion of which will be funded by Federal Transportation Administration (FTA) grant monies, and to authorize Municipal Officers to enter into a multi-year contract if financially advantageous.

` *Note: Passage of this warrant article will authorize the Selectmen to negotiate and sign a new contract with the current boat operators, or new operators, to continue the Cranberry Isles Commuter Boat Service. This warrant article*

provides the Town with the flexibility for a multi-year contract for the commuter boat, or a one year extension.

20. To see if the voters of the Town of Cranberry Isles will vote to authorize the Municipal Officers to appropriate and expend up to twenty thousand dollars ($20,000.00) for the construction of a new float for Manset, and to further authorize the Municipal Officers to do any and all things necessary to award and enter into necessary design and construction contracts on behalf of the Town, expend the funds, and all other things reasonably necessary to accomplish the purpose of this article.

21. To see if the voters of the Town of Cranberry Isles will vote to authorize the Municipal Officers to appropriate fifty thousand dollars ($50,000.00) to be placed in capital reserve fund for a future Town Office building for the Town of Cranberry Isles.

22. To see if the voters of the Town of Cranberry Isles will vote to authorize the Municipal Officers to appropriate twenty thousand dollars ($20,000.00) to be placed in capital reserve funds for the purchase of a new plow truck, sander and related equipment for Little Cranberry Island (Islesford).

23. To see if the voters of the Town of Cranberry Isles will vote to authorize the Municipal Officers to enter into a multi-year contract (Municipal Joinder Agreement) with the Municipal Review Committee, Inc. (MRC), an agreement that would send municipal solid waste to a new processing facility, if financially advantageous. Adoption of this warrant article will authorize the following:
    (i) to authorize the Town to continue as a charter member community of the Municipal Review Committee, Inc. (MRC), organized as a Maine nonprofit corporation and acting as a regional association pursuant to Title 13B and Title 38 of the Maine Revised Statutes, as amended (and specifically Section 1304-B (5-A) of Title 38) for the purpose of managing and facilitating solid waste disposal;

    (ii) to adopt, ratify and confirm the Restated Articles of Incorporation and the Restated Bylaws of the MRC in substantially the form on file with the Town Clerk and posted as part of this Warrant;
    (iii) to authorize the Town to execute and deliver a Municipal Joinder Agreement with the MRC in substantially the form on file with the Town Clerk and posted as part of this Warrant (the "Municipal Joinder Agreement") pursuant to which the Town will become a Joining Member of the MRC (as defined therein) and deliver its municipal solid waste for disposal to a waste management facility being developed by Fiberight, LLC and/or its affiliates (collectively, "Fiberight") in Hampden, Maine, or other waste disposal facility;

(iv) to authorize the MRC to take certain actions on behalf of the Town as set forth in the Municipal Joinder Agreement; and

(v) to authorize a majority of the Selectmen or their duly authorized designee or designees to execute and deliver the Municipal Joinder Agreement on behalf of the Town and to execute and deliver on behalf of the Town in conjunction therewith such other documents and to take such further actions as they may deem necessary or appropriate in order to effect the transactions contemplated by the Municipal Joinder Agreement.

24. To see if the voters of the Town of Cranberry Isles will vote to authorize the Municipal Officers to appropriate and expend up to ten thousand dollars ($10,000.00) for capital expenditure for a well to be located on Town property for the municipal garage at Islesford, and to further authorize the Municipal Officers to do any and all things necessary to award and enter into necessary design and construction contracts on behalf of the Town, expend the funds, and all other things reasonably necessary to accomplish the purpose of this article.

25. To see if the voters of the Town of Cranberry Isles will vote to authorize the Municipal Officers to borrow funds in the original principal amount of up to two hundred fifty thousand dollars ($250,000.00) for capital purchase of a new fire truck for Great Cranberry Island, and to further authorize the Municipal Officers to do any and all things necessary to award and enter into a purchase and sales agreement on behalf of the Town, expend the borrowed funds, and all other things reasonably necessary to accomplish the purpose of this Article.

26. To see if the voters of the Town of Cranberry Isles will appropriate and authorize the Municipal Officers to expend up to four thousand dollars ($4,000.00) toward the cost of restoring and renovating the Spurling Point Cemetery on Great Cranberry Island.

27. To see if the voters of the Town Of Cranberry Isles will vote to authorize the Selectmen to enter into a five (5) month lease agreement in 2016 with the Roman Catholic Bishop of Portland, Maine for use of the church land on Joy Road in Northeast Harbor, Maine, for parking of residents of, and visitors to, the Cranberry Isles.

28. **FUTURE TOWN MEETING**

To see if the voters of the Town Of Cranberry Isles will vote to hold the next annual Town Meeting in 2017, on 11, March 2017 at the Longfellow School, Great Cranberry Island, Maine and to open the meeting at 9 A.M.

29. To see what sum the voters of the Town Of Cranberry Isles will vote to raise and appropriate for each function of Town operations as shown in the Operations

Budget. Each function shall be voted upon separately.

2014 TOWN OPERATIONS BUDGET	RECOMMENDED	DEPT. TOTAL
Dept. 51 – General Government		**328,685.00**
Town Office: Rent & Utilities	14,005	
Office Supplies & Postage	4,900	
Administrative Expenses	10,000	
Insurance	10,000	
Legal	20,000	
Accounting	9,000	
Web Site	1,500	
Selectmen Compensation	23,000	
Contingency Fund	20,000	
Printing	3,000	
Treasurer / Tax Collector / Clerk	45,000	
Elections	1,800	
HCPC Dues	630	
HCPC LUZO Assistance	3,000	
Tax Assessor	27,500	
Administrative Assistant	47,850	
Deputy Clerk / Treasurer	23,000	
Public Safety Coordinator	28,100	
Payroll Taxes	19,000	
Employee Health Benefits	16,900	
Dept. 52 – Public Safety		**354,300**
Fire Dept. Zone 1 (GCI)		
Utilities	2,500	
Heating Oil	5,000	
Gasoline	400	
Insurance	5,000	
Community Safety Program	1,000	
Training	3,000	
Equipment	5,000	
Fire Truck	250,000	
Maintenance	3,000	
Dry Hydrant	1,000	
Travel	1,000	
Fire Dept. Zone 2 (Islesford)		
Utilities	1,200	
Equipment	8,000	
Fire Truck	1,000	
Heating Oil	5,000	

Gasoline	500	
Insurance	5,300	
Training	4,000	
Cistern	1,000	
Drilled Well	10,000	
Fire Dept. Zone 3 (Sutton)		
Equipment	1,000	
C.I. Rescue Service		
Little Cranberry Island		
Ambulance	500	
Supplies	2,000	
Stipend	2,000	
Training	1,000	
Medical Clearance/Vaccines	500	
Insurance	1,000	
EMS Conference	4,500	
Great Cranberry Island		
Ambulance	500	
Supplies	2,000	
Stipend	2,000	
Training	500	
Medical Clearance/Vaccines	500	
Insurance	1,000	
EMS Conference	2,300	
911 Services	1,100	
Streetlights	5,500	
Animal Control Officer	1,000	
Equipment	500	
Training	500	
Constable		
Compensation	5,000	
Admin. Expense	500	
Harbormaster	2,000	
Insurance	4,000	
Dept. 53 – Health & Sanitation		**110,150**
Solid Waste		
Sutton	5,000	
Contracts	71,500	
Barging	0	
Tipping Fees	14,000	
Hazardous Waste	3,500	
Capital Improvements	500	

Permits	850	
Electricity	800	
CEO / Plumbing Inspector	9,500	
General Assistance	2,000	
Supplies	500	
Health Officer	800	
Dept. 54 – Public Transportation		**190,300**
Town Roads		
Maintenance	60,000	
Snow Removal		
Compensation	5,000	
Salt / Sand	8,000	
GCI Contract	17,000	
Town Truck		
Gas	1,000	
Insurance	800	
Maintenance	2,500	
Plow Truck Reserve	20,000	
Garage Heating Oil	1,800	
Garage Maintenance	6,500	
Commuter Service	67,700	
Transportation Study	0	
Dept. 55 – Schools		**583,146**
Dept. 56 – Donations		**22,800**
GCI Library	4,000	
Islesford Library	4,000	
GCI Community Center	3,000	
Islesford Neighborhood House	3,000	
Cranberry House	3,000	
Island Explorer	500	
NEH Library	300	
NEH Ambulance	1,000	
Life Flight	2,000	
Human Service Donations	500	
Hospice of Hancock County	500	
C.I. Education Fund (scholarship)	1,000	
Dept. 57 – Debt Service		**355,211**
SWH Parking – Taxable Bond	45,561	
SWH Parking – Tax Exempt Bond	130,175	
LCI Municipal Garage	22,610	
LCI Roads Capital	37,420	
LCI Pumper Truck	10,985	

LCI Attacker Truck	25,460	
County Tax	83,000	
Dept. 58 - Municipal Facilities		**290,725**
Teleconference	400	
NEH Parking Lot		
Snow Removal	3,800	
Lease	40,375	
Joy Road Parking Lot		
Insurance	750	
Lease	4,000	
Capital Improvement	10,000	
Manset Parking Lot		
Grounds	4,000	
Maint. & Improvements	4,000	
Snow Removal	2,000	
Insurance	3,200	
SWH Property Tax	22,000	
Enforcement	5,500	
Warehouse / Apartment		
Utilities	2,700	
Insurance	2,000	
Mansell Road Building		
Maint. & Repair	2,000	
Insurance	1,000	
Grounds	2,000	
Snow Removal	1,000	
SWH Property Tax	5,200	
Capital Improvements	0	
Restrooms		
Maint. & Improvements	1,500	
Cleaning	13,500	
Supplies	800	
Wharves / Floats / Ramps		
Electricity	2,000	
Maintenance	29,000	
Moorings	8,500	
Insurance	6,400	
Contracts	34,100	
LCI Capital Improvement	0	
Manset Supplies	500	
Manset New Float	20,000	
Town Land		
Cemeteries	5,500	
Town Office Reserve	50,000	
LCI Town Field	3,000	

TOTAL APPROPRIATIONS FOR TOWN OPERATIONS= 2,235,317

TOWN OPERATIONS BUDGET

APPLIED RESOURCES		
Loans:		250,000
Estimated General Fund Receipts:		194,481
From Reserve Accounts:		9,861
EMS Reserve:	6,800	
Public Safety Reserve:	3,061	
School Dept. (State Subsidies and Misc.):		75,158
Commuter Service Subsidy:		22,000
Property Taxes (2016):		1,683,817
	TOTAL=	**2,235,317**

NOTICE

The Registrar of Voters, Denise McCormick, gives notice that she will be in the Cranberry Isles Town Office, 16 Maple Avenue, Islesford, Maine on the 9th, 10th, and 11th of March 2016 between the hours of 9:00 A.M. and 3:00 P.M., and at the Islesford Neighborhood House on the day of the meeting, March 12, at 8:15 A.M. for the purpose of correcting the list of voters for said Town.

***All new voter registrations must provide proof of identification and proof of residency.**

Given under our hand and Town seal this 2nd day of February, 2016.

Richard F. Beal, Chairman

Florence Joy Sprague

Malcolm Fernald

Attest: I, Denise McCormick, Clerk of the Town of Cranberry Isles, Maine do hereby attest and certify this document to be a true copy of the Warrant 2016 to be placed before the voters of the Town of Cranberry Isles on 12 March 2016.

Denise McCormick

ANNUAL REPORT FOR THE AOS 91 BOARD
DECEMBER 2015

During the 2014-2015 school year, we focused on developing a new Mount Desert Island Regional School System (MDIRSS) Teacher and Principal Supervision and Evaluation System, reviewing and revising key policies, deepening and expanding standards-based teaching and learning K-12, and successfully concluding contract negotiations. Our focus during the 2015-2016 school year will continue to be quality implementation of standards based teaching and learning, proficiency-based diplomas and the piloting of our new Supervision and Evaluation System. While we recognize that there is always more to be done to address the needs of all of our learners, we feel that the combined efforts of MDIRSS educators are contributing to improvement in our educational program at all levels. It seems important to note that this report is based on the school year instead of the traditional calendar year, allowing us to more accurately reflect work initiated and completed in a way best aligned with life in schools.

Big Picture

Looking Back **(September 2014 to August 2015)**	**Looking Ahead** **(September 2015 to August 2016)**
• Developed 11 budgets which were soundly approved by the boards that oversee them as well as town councils as appropriate. • Prepared for the piloting of the Supervision and Evaluation process for Teachers/Principals to occur during the 2015-2016 school year. • Submitted and gained approval of State, federal and local grants. • Provided mentoring for more than 20 high quality new teachers across the district. • Strengthened our community partnerships with Jackson Lab, Acadia National Park, MDI Biological Laboratory, Healthy Acadia, College of the Atlantic, Island Readers and Writers and Camp Beech Cliff.	• Complete revisions to the teachers/principal supervision and evaluation system based on pilot; send to local boards for approval. • Continue focused efforts to revise and update policies. • Continue to strengthen standards-based curriculum, assessment, instruction and reporting initiatives leading to a Proficiency-based Diploma. • Continue to explore changes to the AOS structure, cooperative initiatives among towns, and opportunities to improve efficiency and effectiveness. • Prioritize support to students in developing healthy minds, skills and habits in healthy bodies.

Goal 1: Improve Student Achievement and Engagement in School

Rationale: *Success in the 21st century requires students to leave their K-12 educational experience with high levels of literacy and numeracy. As a district, and at each school, we need to be engaged in a cycle of improvement to better serve all of our students each year. Programming [curriculum, course of study, pathways, RTI (Response to Intervention), etc.)], therefore, needs to be specifically targeted to improving reading, writing, mathematics, critical thinking and student engagement and all new and existing programs of study should be measured by how well they contribute to improvement in these five areas. Parents need to be informed and actively involved as partners with the schools in their children's education.*

Looking Back (September 2014 to August 2015)	Looking Ahead (September 2015 to August 2016)
• MDIHS freshmen experienced a new team approach to teaching which helps ensure that they will be successful in demonstrating proficiencies necessary to earn a high school diploma. • Students were assessed in grades 3 through 8 and 11 through a new state exam in Math and Reading. • New standards-based math and science programs were implemented at multiple K-8 schools.	• MDIHS teachers will work in teams with freshmen and sophomore students to continue the proficiency based work started last year. • Teachers and school administrators will be offered additional support and training on how to use data to improve student learning, determine professional development needs and evaluate program effectiveness. • Renew our focus on hands-on science and service learning throughout the district. • The Island Pathways program will be offered at the high school as an alternate learning pathway.

Goal 2: Improve Teaching and Learning
Rationale: *Research shows that quality teaching is the most important variable in student achievement. Skilled teachers who are supported by administrators, have quality teaching materials, have access to and use timely data about student learning, and who actively participate in ongoing professional development make the difference for students. Therefore, it is important that the district prioritize teacher development and support.*

Looking Back (September 2014 to August 2015)	Looking Ahead (September 2015 to August 2016)
• Initial drafting and revision of a new process for the evaluation of teachers and principals was accomplished by a committee made up of teachers, administrators and school board members • Supported extended meeting time for teachers for collaboration, professional learning and teacher-led initiatives both during the school year and throughout the summer. • Provided increased offerings of onsite professional development opportunities for all teachers including in science, math, writing instruction, data literacy, data analysis, beginning reading instruction, standards-based tracking and reporting and other areas.	• Pilot, revise, bring to boards for approval and then submit plan to the state for revised MDIRSS teacher/principal supervision and evaluation system; begin full implementation in Fall 2016-17. • Continue to explore more flexible instructional delivery options system-wide K-12. • Principals will conduct a substantially increased number of classroom observations. • Mentoring and additional support will be provided to 23 new teachers this year. • Continue to find time for groups of teachers to meet, learn together, and collaborate. • Provide teachers with professional development to improve their abilities to differentiate instruction, monitor progress, coach students to develop improved organization and self-regulation skills, and address conflict proactively.

Goal 3: Become More Strategic With Resource Allocation, Use of Personnel and Financial Planning
Rationale: *The Mount Desert Island Regional School System (MDIRSS) is committed to providing students with an excellent education. However, resources are not unlimited and must be used wisely. Health insurance and maintenance costs continue to rise. Enrollment fluctuates but has been decreasing in some of the district schools resulting in the need to look closely at budgets and use of personnel. Advances in technology enable us to think differently about course delivery, communication, professional development, resource sharing and infrastructure upgrades. The community offers rich resources that the schools can utilize. Preparing students for careers, college and citizenship in the 21st century in a time when resources are finite requires strategic planning and coordinated resource management.*

Looking Back **(September 2014 to August 2015)**	**Looking Ahead** **(September 2015 to August 2016)**
• Concluded labor negotiations between school boards and teachers and support staff with three-year contracts. • Completed renovations at the Ashley Bryan School, on Islesford, and started a major renovation of the Longfellow School on Great Cranberry Island. • MDIHS Trustees approved a three-year project to pave the high school driveway and parking lots. Phase One was completed this past June and July. • Developed master plans for building preservation and upgrades were developed at several schools. • Completed the move of the AOS business office accounting system to the Cloud for storage and the district office received favorable audits across the board.	• Additional personal information regarding accumulated sick leave, personal leave and vacation will be provided to employees on a monthly basis attached to their pay stubs. • A part-time AOS 91 district food director will be hired to support local food service directors, plus help with large group orders and working with local farmers. • The MDIRSS school board is considering revisions to the Alternative Organizational Structure (AOS) that would assure uniformity among schools districts regarding employee salaries, health benefits and delivery of services. • Successfully conduct the search for new Superintendent and fill vacancies in the principalship at local schools, resulting in a strong team to lead the district forward.

Respectfully submitted,

Howard Colter, Superintendent of Schools
Julie Meltzer, Director of Curriculum, Assessment and Instruction
Kelley Rush Sanborn, Director of Special Services

	CRANBERRY ISLES SCHOOL DEPARTMENT							School Committee Approved 1/8/16
		14-15	15-16	15-16	16-17			
		Actual	Current	Anticipated	Proposed	$	%	
	Fund Balance	**Receipts**	**Budget**	**Receipts**	**Budget**	**Difference**	**Difference**	
0000-0000-450000	Carryover	97,586	73,529	111,593	66,558	(6,971)	-9.48%	
	Revenues					-		
0000-0000-419908	Miscellaneous(Rent)	3,949	3,600	3,600	3,600	-	0.00%	
0000-0000-412010	Transfer from Tuition Reserve	-	-	-	-	-	#DIV/0!	
0000-0000-431110	State Subsidy	13,983	5,000	13,477	5,000	-	0.00%	Estimate
	Property Taxes					-		
0000-0000-412110	Town Appropriation	447,313	521,222	521,222	507,988	(13,234)	-2.54%	15-16 Including extra for Longf Schl
	Articles 18L, 18M & 18N	**EPS & Additional Local Funds Articles**			**$ 507,988**			
	Total Revenues	562,831	603,351	649,892	583,146	(20,205)	-3.35%	*Increase per $100,000 valuation*
								-$6.85
		14-15	**15-16**	**15-16**	**16-17**			
Regular Instruction		**Actual**	**Current**	**Anticipated**	**Proposed**	**$**	**%**	
	Regular Instruction	**Expend.**	**Budget**	**Expend.**	**Budget**	**Difference**	**Difference**	**Explanation**
1100-1000-510100	Teacher Salaries 3-8	60,484	59,793	59,951	62,824	3,031	5.07%	Incl. Music/Art/Phys. Ed./French
1100-1000-510200	Ed. Tech. Salary 3-8	200	11,520	-	-	(11,520)	-100.00%	
1100-1000-512300	Substitutes	2,663	2,500	2,750	3,000	500	20.00%	$80/day (37.5 Days)
1100-1000-520100	Benefits - Tchrs. - 3-8	2,905	2,877	2,884	3,022	145	5.04%	Incl. 3.36% Retirement cost
1100-1000-520200	Benefits - Ed. Tech. 3-8	15	555	-	-	(555)	-100.00%	
1100-1000-520300	Benefits - Subs/Tutors	199	230	210	230	-	0.00%	
1100-1000-521100	BC/BS: Teachers 3-8	17,634	17,118	19,754	21,729	4,611	26.94%	10% Rate
1100-1000-525100	Tuition Reimb.: Taxable	1,475	3,000	1,500	3,000	-	0.00%	2 - 3 credit courses
1100-1000-525110	Tuition Reimb.: Non-Tax.	-	-	-	-	-	#DIV/0!	
1100-1000-526300	Unemployment	-	-	-	-	-	#DIV/0!	
1100-1000-527100	Worker's Comp. Insurance	-	-	-	-	-	#DIV/0!	
1100-1000-534000	Other Prof. Svcs.: Counsel, etc	-	-	-	-	-	#DIV/0!	
1100-1000-543000	Repairs & Maint: Equipment	-	100	50	100	-	0.00%	
1100-1000-558000	Staff Travel	9,553	9,500	8,500	9,500	-	0.00%	Incl Specials/Princ/Boat Mon/SpEd
1100-1000-561000	Teaching Supplies	2,587	800	800	800	-	0.00%	
1100-1000-564000	Books & Periodicals	1,224	500	500	500	-	0.00%	
1100-1000-573000	Equipment	1,248	500	300	1,000	500	100.00%	
1100-1000-581000	Dues, Fees, Conf.	433	400	400	400	-	0.00%	
1100-1000-589000	Miscellaneous	-	200	200	200	-	0.00%	Dir Dep Fees, Misc.
1100-1000-589005	Special Academic Programs	2,065	2,000	2,000	2,000	-	0.00%	TLC - 1/2 Budget 1/2 REAP
1120-1000-510100	Teacher Salary K-2	60,603	61,676	61,330	62,057	381	0.62%	
1120-1000-510200	Boat Monitor/School Care	20,065	14,400	25,920	26,500	12,100	84.03%	
1120-1000-520100	Benefits - Tchrs. - K-2	2,444	2,967	2,950	2,985	18	0.61%	Incl. 3.36% Retirement cost
1120-1000-520200	Benefits - Boat Monitor/Schl Care	306	693	555	620	(73)	-10.53%	
1120-1000-521100	BC/BS: Teachers K-2	15,562	17,118	15,874	17,461	343	2.00%	
1120-1000-561000	Teaching Supplies - K-2	29	800	800	800	-	0.00%	
1120-1000-564000	Books & Periodicals - K-2	70	250	250	250	-	0.00%	
1120-1000-581000	Dues, Fees, Conf. - K-2	-	250	250	250	-	0.00%	
1100-1000-589001	Safety Factor Contingency	-	9,000	7,000	8,000	(1,000)	-11.11%	
1200-1000-556000	Tuition: Regular Secondary	32,189	55,794	52,154	46,500	(9,294)	-16.66%	15-16 (5) & 16-17 (3) & 1 Extra
	Total Regular Instruction	233,953	274,541	266,882	273,728	(813)	-0.30%	4% Tuit. rate incr. proj.
	Article 18A	**Regular Instruction**			**$ 273,728**			

CRANBERRY ISLES SCHOOL DEPARTMENT								
		14-15	15-16	15-16	16-17			
		Actual	Proposed	Anticipated	Proposed	$	%	
Special Education		Expend.	Budget	Expend.	Budget	Difference	Difference	Explanation
	Special Education							
2200-1000-510100	Salaries - Tchr. - Res. Rm.	10,469	19,028	12,310	12,098	(6,930)	-36.42%	15-16 Actual (15%) 16-17 (25%)
2200-1000-510200	Salaries - Ed. Tech. - Res. R	-	-	1,700	11,683	11,683		
2200-1000-520100	Benefits - Tchr. - Res. Rm.	152	915	350	582	(333)	-36.39%	
2200-1000-520200	Benefits - Ed. Tech. - Res Rm	-	-	130	562	562	#DIV/0!	Ed. Tech. - 4 hrs./day
2100-1000-556000	Tuition: Spec. Ed. / Reserve	5,000	5,000	5,000	5,000	-	0.00%	
2100-1000-556001	Tuition Surcharge - Spec Ed	760	750	750	750	-	0.00%	
2100-1000-561000	Teaching Supplies	-	150	150	150	-	0.00%	
2100-1000-564000	Books & Periodicals	-	100	100	100	-	0.00%	
2100-1000-573000	Equipment	-	100	100	100	-	0.00%	
2200-1000-581000	Dues, Fees, Conf.	-	100	100	100	-	0.00%	
2500-2330-534400	Spec Svcs Assessment/AOS	9,494	9,195	9,195	11,202	2,007	21.83%	Part of Supt's. Office Assessment
2800-2140-534400	Prof. Svcs.: Therapy/Counsel.	-	1,600	500	1,000	(600)	-37.50%	
2800-2150-534400	Other Prof. Svcs. - Speech	4,949	8,000	6,000	6,000	(2,000)	-25.00%	
2800-2160-534400	Other Prof. Svcs. - OT	1,450	2,800	2,000	2,000	(800)	-28.57%	
2800-2180-534400	Other Prof. Svcs. - PT	-	1,000	2,000	2,000	1,000	100.00%	
2500-2330-581200	Dues & Fees - Medicaid Bill.	23	100	50	100	-	0.00%	
	Total Special Education	32,297	48,838	40,435	53,427	4,589	9.40%	
	Article 18B	***Special Education***			***$ 53,427***			
	Article 18C	***Career & Technical Education***			***$ -***			
Other Instruction								
	Co-Curricular							
9100-1000-515000	Co-Curricular: Stipends	3,300	500	3,500	3,600	3,100	620.00%	Overnight Chaperones
9100-1000-520000	Co-Curricular: Benefits	139	39	200	275	236	605.13%	
9100-1000-534000	Fine Arts Perform/Enrichment	-	300	300	200	(100)	-33.33%	
9100-1000-560000	Supplies	-	300	300	200	(100)	-33.33%	
9100-1000-589000	Enrich (Field Trips)/Spec Boats	682	1,000	1,000	800	(200)	-20.00%	
9200-1000-515000	Athletic Stipends	1,750	3,000	1,750	3,000	-	0.00%	
9200-1000-520000	Athletic Benefits (Med./SS)	134	230	135	230	-	0.00%	
9200-1000-534000	Athl: Prof Svcs.Swim/Sports	880	1,000	1,000	1,200	200	20.00%	Swim Lessons & Sports
9200-1000-589000	Athletic: Misc. Exp.	1,230	600	1,200	1,000	400	66.67%	
	Total Co-Curricular	8,115	6,969	9,385	10,505	3,536	50.74%	
	Article 18D	***Other Instruction***			***$ 10,505***			
Student & Staff Support								
	Guidance							
0000-2120-534000	Salaries: Guidance	820	3,181	3,181	3,181	-	0.00%	2 - 5 hr. days / mo.
0000-2120-520100	Benefits: Guidance Counsel.	63	244	244	244	-	0.00%	
0000-2120-561000	Supplies	8	100	50	100	-	0.00%	
	Total Guidance	891	3,525	3,475	3,525	-	0.00%	
	Health Services							
0000-2130-534000	Other Prof. Svcs.: Nurse	-	1,000	1,242	1,500	500	50.00%	Contract w MDI Hospital
0000-2130-560000	Supplies	314	250	250	200	(50)	-20.00%	
0000-2130-581000	Dues, Fees, Conf.	-	-	-	-	-	#DIV/0!	
	Total Health Services	314	1,250	1,492	1,700	450	36.00%	

CRANBERRY ISLES SCHOOL DEPARTMENT								
		14-15	15-16	15-16	16-17			
		Actual	Current	Anticipated	Proposed	$	%	
Student & Staff Support		Expend.	Budget	Expend.	Budget	Difference	Difference	Explanation
	Improvement of Instruction							
0000-2200-534000	Curric & Tech Assessm/AOS	5,543	6,275	6,275	9,224	2,949	47.00%	Part of Supt's. Office Assessment
0000-2210-515000	Mentor Stipend	14	1,000	-	-	(1,000)	-100.00%	
0000-2210-520000	Benefits - Mentor Stipend	1	50	-	-	(50)	-100.00%	
0000-2212-533000	Curriculum Dev & Certif.	84	135	120	120	(15)	-11.11%	$7/student
0000-2212-533001	Instr. & Curric Dev - NWEA	167	200	225	-	(200)	-100.00%	Moved to Technology Section
	Total Improve. Of Instruction	5,809	7,660	6,620	9,344	1,684	21.98%	
Student & Staff Support								
	Library & Audio Visual							
0000-2220-560000	Supplies	-	-	-	-	-		
0000-2220-564000	Books & Periodicals	292	200	100	200	-	0.00%	Trade Books incl.
	Total Library & AV	292	200	100	200	-	0.00%	
	Technology							
0000-2230-510100	Salaries: Technology	-	5048	-	-	(5,048)	-100.00%	
0000-2230-520100	Benefits: Technology	-	243	-	-	(243)	-100.00%	
0000-2230-515000	Stipend - Techn.	-	-	-	-	-	#DIV/0!	
0000-2230-534000	Professional Svcs.	-	1,000	6,291	6,500	5,500	550.00%	Contracted w district for addtl svcs
0000-2230-534200	Svc. Agreem./Maint./Repairs	-	1,000	800	1,000	-	0.00%	
0000-2230-565000	Software	492	800	600	600	(200)	-25.00%	
0000-2230-565001	AOS Software/Site Licenses	109	800	800	800	-	0.00%	Site Licenses
0000-2230-573400	Equipment - Tech. Related	3,226	800	800	800	-	0.00%	Laptop Lease
1200-1000-556130	Equip. - Second. - Laptops	909	1,500	-	-	(1,500)	-100.00%	Not Charging anymore
0000-2230-5810000	Dues/Fees	-	-	-	-	-	#DIV/0!	
	Total Technology	4,736	11,191	9,291	9,700	(1,491)	#DIV/0!	
	Article 18E	***Student & Staff Support***			***$ 24,469***			
System Administration								
	Office of Superintendent							
0000-2320-534100	Assessment: Administration	8,474	8,862	8,862	10,015	1,153	13.01%	Cranb's Share of AOS #91 = 1.97%
	Total Office of Supt.	8,474	8,862	8,862	10,015	1,153	13.01%	Incr. of .14% from 1.83% in 15-16
System Administration								
	School Committee							
0000-2310-515000	Stipends: School Committee	1,500	900	900	900	-	0.00%	
0000-2310-520000	Benefits: School Committee	115	69	69	69	-	0.00%	
0000-2310-534000	Prof. Svcs.: Legal & Audit	3,884	3,500	6,000	4,000	500	14.29%	
0000-2310-554000	Advertising	45	800	600	600	(200)	-25.00%	
0000-2310-581000	Dues / Fees / Conferences	257	500	400	500	-	0.00%	
	Total School Committee	5,801	5,769	7,969	6,069	300	5.20%	
	Article 18F	***System Administration***			***$ 16,084***			

CRANBERRY ISLES SCHOOL DEPARTMENT								
		14-15	15-16	15-16	16-17			
		Actual	Current	Anticipated	Proposed	$	%	
School Administration		Expend.	Budget	Expend.	Budget	Difference	Difference	Explanation
	Office of Principal							
0000-2410-510400	Principal's Salary	22,277	22,723	22,723	23,323	600	2.64%	60 Day Contract
0000-2410-520400	Benefits - Principal	913	1,093	1,093	1,122	29	2.65%	Incl. 3.36% Retirement cost
0000-2410-521400	BC/BS: Principal	5,114	6,251	5,796	6,376	125	2.00%	
0000-2410-525100	Tuition Reimb.	-	1,500	1,500	1,500	-	0.00%	3 - 3 credit courses (Pro-rated)
0000-2410-543000	Svc. Agreem - Copier	243	100	250	250	150	150.00%	
0000-2410-544450	Rental - Copier Lease	35	243	243	187	(56)	-23.05%	Payment 1 of 5
0000-2410-558000	Staff Travel	275	200	275	275	75	37.50%	Travel
0000-2410-560000	Office Supplies / Postage	337	350	350	350	-	0.00%	
0000-2410-581000	Dues / Fees / Conferences	679	250	250	250	-	0.00%	
0000-2410-589000	Miscellaneous	695	300	700	750	450	150.00%	
	Total Office of Principal	30,568	33,010	33,180	34,383	1,373	4.16%	
	Article 18G	***School Administration***			***$ 34,383***			
Transportation and Buses								
	Student Transportation							
0000-2700-543005	Repairs & Maint - Schl Car	60	800	800	800	-	0.00%	
0000-2700-551300	Room & Board - Secondary	5,700	20,000	17,550	21,600	1,600	8.00%	$150/Week
0000-2700-551400	Student Transp Purch - Elem.	14,300	18,000	18,000	19,000	1,000	5.56%	Transp fr ABS to GCI
0000-2700-551400	Student Transp Purch - Sec.	2,669	4,000	5,000	6,000	2,000	50.00%	
0000-2700-562600	Fuel	193	150	200	200	50	33.33%	
	Total Transportation	22,921	42,950	41,550	47,600	4,650	10.83%	
	Article 18H	***Transportation & Buses***			***$ 47,600***			
Facilities Maintenance								
	Operation & Maint. Of Plant							
0000-2600-511800	Salaries: Custodians	4,858	6,711	6,531	8,164	1,453	21.65%	10 hrs./wk x 40 weeks
0000-2600-520800	Benefits - Custodians	540	514	500	625	111	21.60%	
0000-2600-534000	Purchased Prof. Svcs.(Caretaker)	2,200	2,400	2,400	2,400	-	0.00%	
0000-2600-552000	Insurance: Building/Equip.	1,750	1,900	1,981	2,500	600	31.58%	
0000-2600-553200	Telephone	1,401	1,600	1,200	1,600	-	0.00%	
0000-2600-560000	Supplies	80	500	500	500	-	0.00%	
0000-2600-562200	Electricity	1,537	1,600	1,650	2,500	900	56.25%	
0000-2600-562400	Heating Oil/ Propane	3,889	10,000	6,000	10,000	-	0.00%	
0000-2600-573000	Equipment	699	-	-	500	500	#DIV/0!	
0000-2600-581000	Dues / Fees / Conferences	113	130	100	130	-	0.00%	
0000-2600-589000	Miscellaneous	1,572	4,200	4,200	2,000	(2,200)	-52.38%	Generator Hook-up/Stairs & Floor
0000-2620-543000	Repairs & Maint - Bldgs.	5,822	6,000	6,000	6,000	-	0.00%	Refinish/Handicap Platform
0000-2630-543000	Repairs & Maint - Grounds	1,577	7,000	7,000	5,000	(2,000)	-28.57%	Playground / Grounds
	Total Oper. & Maint.	26,038	42,555	38,062	41,919	(636)	-1.49%	
Facilities Maintenance								
	Capital Outlay							
0000-2690-545001	Building - Longfellow	-	45,000	45,000	-	(45,000)	-100.00%	Addtl Amount voted at Town Mtg 2015
0000-2690-545003	Equipment - Longfellow	-	-	-	10,000	10,000	#DIV/0!	Outfit New School
	Total Capital Outlay	-	45,000	45,000	10,000	(35,000)	-77.78%	
	Article 18I	***Facilities Maintenance***			***$ 51,919***			

CRANBERRY ISLES SCHOOL DEPARTMENT								
Debt Service								
	Debt Service							
0000-5100-583200	Interest	18,886	16,501	16,501	15,475	(1,026)	-6.22%	Payment Year 3 of 10
0000-5100-583200	Principal	52,145	54,530	54,530	55,556	1,026	1.88%	
	Total Debt Service	71,030	71,031	71,031	71,031	-	0.00%	
	Article 18J	***Debt Service & Other Commitments***			***$ 71,031***			
	Article 18K	***All Other Expenditures***			***$ -***			
	Grand Totals:	**451,238**	**603,351**	**583,334**	**583,146**	**(20,205)**	**-3.35%**	
	Article 18O	***Total Expenditures***			***$ 583,146***			

CRANBERRY ISLES SCHOOL REPORT

Students:
The Ashley Bryan School has 17 students enrolled in grades K-7 for the 2015-2016 school year.

Kindergarten:	1	3 grade:	1	6 grade:	3
1 grade:	1	4 grade:	3	7 grade:	4
2 grade:	2	5 grade:	2	8 grade:	0

The Mount Desert High School has 5 students enrolled for the 2015-2016 school year. There are 2 freshman, 1 sophomore, and 2 seniors.

Teachers and Staff:
Our students are so lucky to have such dedicated and enthusiastic professionals guiding them on their academic journey. I can't say enough wonderful things about the people that are educating your island children!

Our fabulous classroom teachers are Audrey Noether and Lauren Simmons. This is their third year at the school where they work collaboratively to meet the complicated needs of all students in our unique multi-age school setting.

Gail Grandgent is our boat monitor and educational technician. Gail plays a very important role in ensuring that our Great Cranberry Island students have a safe and comfortable trip to school every day. We also have Serena Spurling providing academic assistance throughout the week. Thank you Gail and Serena!

We are fortunate to have a wonderful group of "Specials" teachers join us to enhance our students' learning:

- Claire Cullinane / Michelle Lear – Special Education
- Katrina Linscott – French teacher
- Ursula Hanson – Guidance
- Mary Lyman – Art teacher
- Beau Lisy – Music teacher
- Alex Johnson – Physical Education teacher
- Ann Woodward – Speech and Language Therapy
- Catherine Shaw – Nurse

The dynamic team of Melissa Amuso and Jim Amuso keep the Ashley Bryan School clean and well maintained. Ingrid Gaither has taken on the responsibility of caretaking for the Longfellow School. She is also our substitute boat monitor and joins us every Wednesday in place of Gail.

Curriculum / Instruction / Assessment:
The students of the Cranberries are part of the Teaching and Learning Collaborative (TLC), sponsored by the Island Institute, which includes many of the unbridged outer islands, with functioning schools, off the coast of Maine (the Cranberries, Frenchboro, Isles au Haut,

Matinicus, Monhegan, Long Island and Cliff Island). Being part of the TLC enables our students to interact with the students from other island schools and use technology to extend to their learning past our school walls.

The TLC's Interisland Event was held on Monhegan this fall. It was and amazing three days of friendship, fun and learning. All students and their parents were invited to attend and reported that it was a fantastic experience for all.

The middle school students were also able to go to SEA Camp on the Schoodic Peninsula for a few days of hands on learning in the areas of marine biology, geology and marine chemistry.

Extra – curricular activities and events:

Coach Cliff Smith and Assistant Coach Lauren Simmons did a fantastic job with our cross country team this year. Our runners were able to participate in district meets with Mount Desert Elementary School (MDES) and hosted an Interisland Invitational with the Swan's Island runners on Great Cranberry Island.

Coach Melissa Muso started a track and field team on the islands with great success. Our athletes posted admirable teams in their respective events, with a few making it to competition at the state level. Through a generous donation, Coach Melissa and the students of the Cranberry Isles will be part of the Outer Island Croquet League. Croquet is a sport that is a perfect match for the islands and we are very excited to get started!

Friday afternoons in May are our day to head across the pond to the Mount Desert Island YMCA for swim lessons. This is an invaluable opportunity for our students to learn about water safety, work on their swimming skills and gain confidence in their aquatic abilities.

Our middle school students traveled to Mount Desert Elementary School on Tuesday afternoons in the fall to participate in chorus. The students showcase their vocal skills in a collaborative winter concert in Northeast Harbor. Our middle school students are also invited to participate in the MDES Arts Week held every spring.

Physical Plant:

The Longfellow School's renovations are complete and the school looks wonderful. I hope all community members take the time to see the changes that were made.

Closing:

A big thank you to our school board: Kelly Sanborn (chair), Cari Alley and Amy Palmer for all their hard work and dedication throughout the year.

I would also like to thank the community for their continued support of the school and staff. Island schools are truly magical places for your children to experience, learn and grow. I wish that every child were so lucky.

Respectfully submitted,

Heather Webster, Principal

BROADBAND COMMUNICATIONS WORKING GROUP

Thomas Powell, Chair
Katelyn Damon
Ingrid Gaither
Rosalie Kell
Skip Stevens

The Town of Cranberry Isles Selectmen voted to create the Broadband Communications Working Group to work on the Town's behalf to improve broadband internet access on the Cranberry Isles on December 8, 2015.

Beginning early in 2015 the Island Institute partnered with Tilson Technologies to produce a report describing the current state of broadband on the outer islands of Maine. In addition, this report offered suggestions for a path to improving service and detailed the potential economic impact of such improvement.

Four members of the Broadband Communications Working Group attended the conference that accompanied the release of this report. This was a deep dive into the state of broadband in Maine and the islands which helped give background to the present situation and future opportunities, as well as explained some of the basics of broadband technology.
The Tilson Survey as well as presentation material and resources are available online at http://www.islandinstitute.org/resource/maine-island-broadband-conference.

The Working Group's initial efforts will concentrate on beginning the process of contacting existing carriers to the islands in an effort to improve service as well as working to improve access to the broadband resources (such as the libraries) that already exist.

While we have only met once in 2015, we plan to continue our efforts throughout the coming year.

Respectfully Submitted,

Thomas Powell, Chair

ASSOCIATION FOR THE PRESERVATION OF SUTTON ISLAND (APSI) REPORT

The Association for the Preservation of Sutton Island ("APSI") is a not-for-profit entity established in the 1970's. APSI's purpose is:

To preserve and protect the scenic beauty and tranquility of Sutton Island for the benefit of (currant and), future property owners on the island and the public good.

APSI works closely with the Town of Cranberry Isles and, in recent years, has focused on the provision of administrative information, and facilitating infrastructure maintenance and improvements, emergency and fire response, and waste-management services for Island residents. Unfortunately, partly because Sutton Islanders are not full-time residents and cannot attend most meetings, our concerns are not always effectively represented, despite our contributions to the Town's tax base.

This year, break-ins and vandalism by deer hunters has again been a significant problem, despite the sign posted at the Town Dock. Several initiatives are underway to address this issue, including closer coordination with local and state authorities and potentially registering legitimate hunters.

In addition, regular, reliable and reasonably-priced ferry service continues to be a big issue for Sutton and the other Cranberry Isles as many island residents rely almost exclusively on Mail Boat service. We continue to work with the Transportation Task Force established with the Town.

In this vein, this year's updated tax assessment was a source of further concern, including because there are very few comparative sales, and those that do exist for Sutton alone, did not seem to be properly taken into account. The result: several specific challenges as well as significant tax increases on often remote properties with limited resale potential. Nonetheless, I think I speak for all Island residents in acknowledging our good fortune and expressing how much we cherish our association with Sutton Island and all of the Cranberry Isles.

APSI committees are engaged in various activities, including wildlife preservation and documentation, managing the deer population, coordinating with the Town over the maintenance of the Sutton Town Dock and certain walkways, etc. and in tracking and documenting the history of the Island and its historic inhabitants. Suffice to say that APSI and its members are committed to maintaining the beauty and wild nature of the Island eco-system, to maintaining harmony between and among Island residents and to preserving the unique appeal of the Island experience, which includes the right to a certain solitude.

APSI meets annually. Our 2016 meeting will (reverting to normal) be at 4:00 p.m. on the last Thursday of July (the 28th) at a place on the island to be determined. In the meantime, I can be reached at: (212) 278-1508 or by email: jnevius@andersonkill.com

Please do not hesitate to contact me if you have any questions or Island business you would like to discuss or add to the Annual meeting agenda.

Respectfully submitted, John Nevius

ISLESFORD NEIGHBORHOOD HOUSE ASSOCIATION (INHA)

In 2015, the Islesford Neighborhood House was the site of many island and Town activities both inside and outside of its walls. Thank you to everyone who did their part to help make all the events happen and keep the building functioning well.

The usual summer events occurred: the 4th of July picnic on the Town Field, Movie Nights for adults and children, the Islesford Fair, Literary Evening and Wits and Nitwits. Joining that list was the dinner theater production of "Gone Postal!" written and directed by Mary Morse-Dwelley and presented on two weekends. Meetings occurred year round both upstairs and downstairs, and the Telemed, along with related medical offerings, continued to function in the parlor. And of course the Library continued to be a hub of activity throughout the year, with Cindy's "Tea on Tuesday" continuing to be popular in the cold months.

The big news for the year is that, just in time for Santa's Supper in December, the Great Hall was insulated. In late summer, the Board of Trustees contracted with Sinclair Builders of Ellsworth to complete this most anticipated part of the renovation of the building. Along with the insulation which is covered with V-notch pine boards, the hall and stage area are now sporting energy efficient windows, the foundation around the outside is sealed and skirting has been added to the outside of the stage area. The wiring and lighting has been updated and the casement windows facing the street on the second floor have also been replaced. Not part of the insulating project, but desperately needed, the cedar shakes were replaced on the south side of the two-story section of the building. Now that it can be heated more efficiently and be more comfortably used, we look forward to more activities taking place in the Islesford Neighborhood House.

Many thanks to all those who willingly serve, in so many capacities, making community activities fun and enjoyable for the visitors who come for a few days, and to those who make the island their home. To the planners, the shoppers, the cooks, the cleaners, those who set up and those who take down, the presenters, the actors, the fixers and to so many who contribute financially – you are all greatly appreciated. We are looking forward to another great year with you.

Respectfully submitted,

The INHA Board of Trustees

Ellie Miller, President; Peyton Eggleston, Vice-President; Eleanor Bright, Treasurer, Skip Stevens, Secretary; Alden Hathaway, Sally McLendon, Mary Schuch, Cheryl Sholl and Hugh Smallwood

Waiting for the Boat, Isleford

Christmas Time at Great Cranberry Island

CRANBERRY ISLES LADIES AID SOCIETY REPORT

Another busy year has passed! Willing workers, a variety of merchandise, lovely baked goods, a diverse display of great raffle items, beautiful weather and happy customers combined to result in a fun and successful August Fair. Other fundraising events included dinners, barn sales and Pie Nights. A small yet festive Christmas Sale on December 5th was enjoyed by participants and provided a good sum for our treasury. Throughout the year our facilities were used for meetings, wedding celebrations, memorial services, running events, the Community Thanksgiving Dinner, pick-up games on the ball field, church services and coffee hours. We were particularly pleased to host events for our school children and their outer island friends.

We continue to focus on our commitment to keep our facilities well maintained. Fluorescent lighting in our kitchen was recently replaced with up-to-date LED lighting, the bathroom light was replaced, and maintenance was completed on our generator. The number of appliances and public meals has increased since the Community Center addition was completed over fifteen years ago – our electrical service will soon be upgraded to accommodate our current usage and needs.

Cranberry Island clothing, note cards, calendars, and other items may be purchased year-round by contacting our President, Eileen Richards. Please keep us in mind when you are shopping for gifts!

A committed core of officers and members works to keep our organization strong and welcoming to all. With the support of many year-round and summer residents, sister organizations and the Town of Cranberry Isles, we are able to maintain our facilities, provide social opportunities and assist with community needs. We are committed to continuing the strong role of the Ladies Aid Society within the Cranberry Isles community and to maintaining the traditions of handmade crafts, good food, sharing ideas and working together on a variety of projects.

We greatly appreciate all who support our efforts in so many ways; your interest and involvement is essential to our success!! Here's to a great 2016 – please join us for meetings, workshops and events.

Respectfully submitted,

Mary A. Wallace
Ladies Aid Society Secretary

GREAT CRANBERRY ISLAND LIBRARY REPORT

PO Box 89
Cranberry Isles, ME 04625
207-244-7358

Year 2015 sure felt busy, and the numbers prove it. Circulation stayed about the same. Around 1,800 items (books, movies, etc.) were checked out, but patronage was up, over 2,000 visitors, an increase over the last few years. We are so thankful for your patronage!

Our patrons are more than just customers. They are our friends, neighbors, and our biggest supporters. The library appreciates your support every year, financially and otherwise. Thank you to all who donate time, money, and effort year after year by working or attending our fundraisers, offering tips and suggestions, and making use of the library's collection.

We're proud to offer a year round library with including reduced hours in the winter. Wireless internet is available at all times along with 4 public use computers, a printer, fax, and a color copier. E-readers and access to Maine State Download Library is also available for free.

All funding comes from private donations, a Town grant, and yearly fundraising events. Thank you to the Town and island residents for your support. And thanks to the Library Board of Directors for their guidance.

Respectfully submitted,

Ingrid Gaither

ISLESFORD NEIGHBORHOOD HOUSE LIBRARY REPORT

The Success of our library depends on our patrons, and we have been very successful so far this year. We have had a total of 1463 items checked out by the 2503 patrons who have visited so far this year. 880 patrons have used the two public access library computers and or the internet service provided by the MSLN.

Volunteers have donated 220 hours of their time to keep the library open. Thank you, Ellie Miller, Jack Miller, Skip Stevens, Sally Rowan, Jeanne Smith, Barbara Bryant, Amy Palmer and Serena Spurling. We could not run the library without you. We are open six days a week in the summer, two days a week in the winter, and the internet is available 24/7 year round.

We have purchased 91 new books and plan to purchase more books in December. We have had many donations of new books as well.

We had our annual bake sale on Memorial Day, Adopt a book, and our second buoy auction. Literary Evening was started by Sarah Corson and is now organized by Erica Merrill. Thank you both.

Tuesday morning at the Library was another popular program we sponsored. It is a coffee hour with cake, muffins, scones, coffee and tea. All are welcome. People started asking in August when we were going to start again. January is the answer. Anna Fernald made all the coffee. Thank you.

We have many groups use the library for meetings. Sometimes people just enjoy the library while waiting for a boat. The Ashley Bryan School comes Thursday afternoons. Students check out books and have a book read to them. Skip and Jack run movie night in the summer. Movies for adults downstairs and for children upstairs.

We are the waiting room when the dentist clinic is here as well as the waiting room when the flu shot clinic is happening. All groups are welcome to use the library when it is not in conflict with the library hours.

Thank you to the Town of Cranberry Isles; we truly could not operate without your support.

Respectfully submitted,

Cynthia A. Thomas, Islesford Library Director.

GREAT CRANBERRY ISLAND HISTORICAL SOCIETY (GCIHS) / CRANBERRY HOUSE REPORT

Cranberry House is owned and operated by the GCI Historical Society. Cranberry House includes the historical museum, outdoor dining café, upstairs arts center, basement media and archiving center, the Sammy Sanford Historical Cabin, professionally maintained gardens, landscaped ponds and woods, and the Whistler Cove trail. The Historical Society also owns and operates the Cranberry Explorer shuttle, which serves the entire island with scheduled transportation service between mid-June and mid-Sept.. This year the museum hosted 3386 visitors, while the shuttle carried 4248 riders. The year was notable for the passing of Bruce Komusin, a GCIHS Founder and Vice-President, whose loss left a huge void in the organization. An August memorial service at Preble Cemetery with reception following at Cranberry House was held on a beautiful sunny day.

The museum and café operate from Memorial Day Weekend thru Columbus Day Weekend. Chef Cezar Ferreira returned to operate the café for his second season. Volunteer receptionists greeted visitors to the museum. Professional Archivist Anne Grulich and team coordinated several new museum exhibits this summer including: 1) Bruce Komusin Tribute, 2) Parsonage Restoration Discovery of 19th Century Shoes and Wooden Toys Artifacts, 3) Stanley Cemetery Restoration, 4) Cranberry Isles Farming History 1760's Thru 1880's. The Archiving and Historical Research Committee continued meeting during the winter months under her supervision. Working relationships were established with the Northeast Historic Film organization of Bucksport, and with Islesford Historical Society to provide archiving support.

Cranberry House remained busy year round, hosting 296 events spread between the Arts Center, Shaw Cabin, Whistler Cove Trail and the exterior grounds. Activities included many lectures, meetings, art exhibits, adult workshops / classes, kids crafts, the Heliker / LaHotan Meet the Artists lecture series, community play reading, poetry nights, health classes and clinics, art classes, parties, historical slides shows and guided nature trail walks. New this year were lobstering lectures and scheduled yoga classes .The Seaside Playhouse continued to present a wide selection of classic and newer popular movies between early April and New Years. Several island kids operated a daily yard sale / jumble table on the grounds. In July, Cranberry House hosted the College of Atlantic Summer Camp, 26 kids and adults, for one day of varied activities.

Island Institute Fellow Jessica Duma, sponsored by GCIHS, completed her first of two years on the islands researching the farming history of the Cranberry Isles and working with the school children to foster an appreciation of both its agricultural history and also the potential for present-day farming and organic gardening on the islands. She presented well-received lectures on her work and designed the museum exhibit on early farming. She plans this year to update the exhibit to reflect her research on the latter-day farming history from the 1880's thru the 1920's. Additionally, her positive presence supporting other community-related activities on the islands has extended far beyond her initial grant-funded work objectives.

Other positive developments this year have included upgrading our computer systems to integrate existing separate networks, thus enabling and expediting retrieval of archival information and fostering cooperative access with other historical societies. Tom Powell has been graciously contributing his time and talents in this regard. We have also expanded the Blue Heron Pond and completed extensive landscaping around the two ponds and cabins with volunteer labor and donations. Ric Gaither and Ben Walls have been especially helpful. The newer families on the island have been much appreciated for lending their support in many ways this year to the various programs which Cranberry House provides to the communities. We also welcomed two new members to our Board of Trustees – Kenneth Schmidt and Miriam Hinnant.

2016 promises to be another exciting, event-filled year at Cranberry House. One future project we hope to accomplish, in cooperation with the Town, is the restoration of the Revolutionary War Cemetery at Spurling Point, which has been long neglected. We continue to appreciate the wonderful outpouring of support received from both the year-round and summer residents of our island communities. We look forward to providing quality programs which are entertaining and educational for all ages in a great community setting.

Respectfully submitted,

Phil Whitney – President

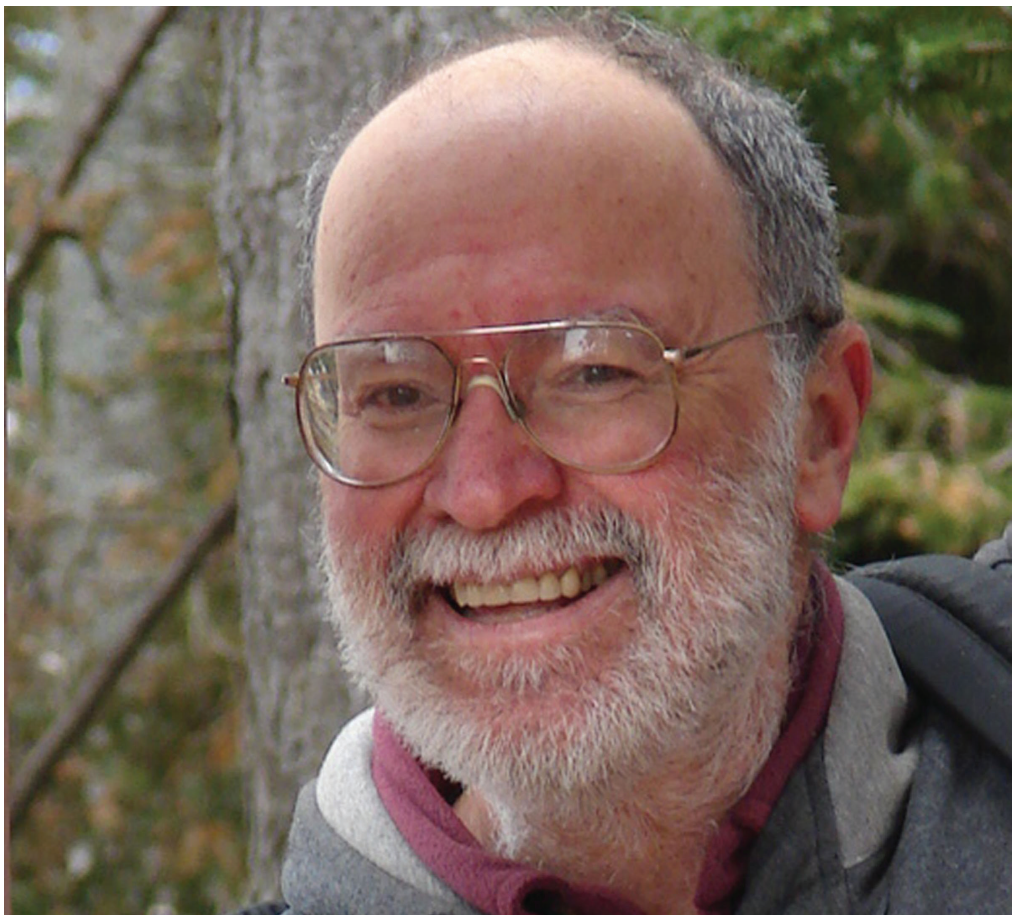

In Memory of Bruce Komusin

CRANBERRY ISLES REALTY TRUST (CIRT) REPORT

Cranberry Isles Realty Trust (CIRT) enjoyed another productive and satisfying year in 2015. CIRT's mission is to provide affordable rental housing opportunities on the Cranberry Isles for prospective qualified residents with the intent to reverse the trend of declining population numbers in the year-round island communities There were numerous changes among tenants and personnel during the year. General Manager John Savage departed in April for job opportunities in Montana. Tiffany Tate departed the Kane House on Great Cranberry on April lst. Rosalie Kell and family arrived at the Rice House on Great Cranberry on May lst. Ben & Darlene Sumner and family arrived at the Kane House the first week of May. All five CIRT residences (four on GCI, one on Islesford) have been fully occupied since May. Ric Gaither and Melissa Amuso have continued as Day-to-Day Property Manager and Bookkeeper respectively. We welcomed Linda Lunt, Sally Rowan, Jim Gertmenien and Jim Singerling as new Directors.
. CIRT, in conjunction with Island Institute, and assisted by Island Fellow Jessica Duma, coordinated energy audits and either subsequent heating upgrades or insulation work to the three older CIRT homes. Home Energy Answers of Albion, ME was the contractor. Extensive renovations and upgrades totaling approximately $25,000 were completed to the Kane and Amuso Houses. Included was the installation of a heat pump system in the Amuso residence. Also, two new generators for supplying back-up power were installed in the two new houses, requiring an additional $5000 expenditure. During this year, even with these expenses, we have managed to keep the monthly rental rates the same – $750 plus utilities for the two new homes and $600 plus utilities for the three older homes.

The coming year should be equally as active for CIRT. Bruce Komusin, who donated acreage for the two new houses on Great Cranberry, passed away from cancer in February, 2014. His will has stipulated that approximately 14 acres of woodlands, including a large potentially year-round house, be donated to CIRT. This inheritance will be accomplished by January, 2016. CIRT Directors will be researching thoroughly all options for use of the property in accordance with our mission objectives and the best interests of the Town. CIRT leaders will be attending an Island Leadership Conference for non-profits in Belfast on January 8th thru January 10th. CIRT also plans to coordinate with Island Institute Economic Development personnel to host a Job Opportunities Training Seminar this spring for CIRT tenants and other interested job-seekers on the Cranberry Isles.

Other important activities this year will include making extensive renovations to the Rice House, researching possible new affordable housing opportunities (especially on Islesford), and identifying potential qualified new year-round residents for future settlement on the islands. We will be publishing our next newsletter later this spring. We encourage individuals with questions or interest in supporting CIRT initiatives to contact us either in person or at 244-5933.

Phil Whitney – President

SUSAN M. COLLINS
MAINE

413 DIRKSEN SENATE OFFICE BUILDING
WASHINGTON, DC 20510–1904
(202) 224–2523
(202) 224–2693 (FAX)

United States Senate
WASHINGTON, DC 20510–1904

Dear Friends:

It is an honor to represent Maine in the United States Senate. I am grateful for the trust the people of our State have placed in me and welcome this opportunity to share some key accomplishments from 2015.

Growing the economy by encouraging job creation was and remains my top priority. The tax-relief bill signed into law at the close of last year contains three key provisions I authored to help foster job creation and provide small businesses with the certainty they need to invest, grow, and, most important, hire new workers. Another provision I authored that became law last year gives a boost to both Maine's economy and traffic safety. This provision permanently changed the federal law that previously had forced the heaviest trucks onto our country roads and downtown streets, rather than allowing them to use Maine's federal Interstates. In addition, I was glad to help secure another significant award for the University of Maine's deepwater offshore wind initiative, which has the potential to advance an emerging industry and create thousands of good jobs in our state.

Maine's historic contributions to our nation's defense must continue. In 2015, I secured funding toward a much-needed additional Navy destroyer, likely to be built at Bath Iron Works. Modernization projects at the Portsmouth Naval Shipyard that I have long advocated for were also completed, as were projects for the Maine National Guard.

I was also deeply involved in crafting the new education reform law to better empower states and communities in setting educational policy for their students. The law also extends a program I co-authored that provides additional assistance to rural schools, which has greatly benefitted our state. A $250 tax deduction I authored in 2002 for teachers who spend their own money on classroom supplies was also made permanent last year.

As a result of a scientific evaluation of the nutritional value of potatoes required by a law that I wrote, the wholesome fresh potato finally was included in the federal WIC nutrition program. I also worked on other issues important to Maine's farmers and growers, including research on wild blueberries and pollinating bees.

As Chairman of the Housing Appropriations Subcommittee, I have made combating veterans' homelessness a priority. This year's housing funding law includes $60 million for 8,000 new supportive housing vouchers for homeless veterans. Since this program began in 2008, the number of homeless veterans nationwide has dropped by one third. Maine has received nearly 200 vouchers to support homeless veterans.

Last year, I became Chairman of the Senate Aging Committee. My top three priorities for the committee are retirement security, investing more in biomedical research, and fighting fraud and financial abuses targeting our nation's seniors. I advocated for the $2 billion increase in funding for the National Institutes of Health to advance research on such diseases as diabetes and Alzheimer's. The Senate also unanimously passed my bill to support family caregivers. The Aging Committee's toll-free hotline (1-855-303-9470) makes it easier for senior citizens to report suspected fraud and receive assistance and has already received more than 1,000 calls.

A Maine value that always guides me is our unsurpassed work ethic. As 2015 ended, I cast my 6,072nd consecutive vote, continuing my record of never missing a roll-call vote since my Senate service began in 1997.

I appreciate the opportunity to serve Hancock County and Maine in the United States Senate. If ever I can be of assistance to you, please contact my Bangor state office at 207 945-0417, or visit my website at www.collins.senate.gov. May 2016 be a good year for you, your family, your community, and our state.

Sincerely,

Susan M Collins

Susan M. Collins
United States Senator

ANGUS S. KING, JR.
MAINE

133 HART SENATE OFFICE BUILDING
(202) 224-5344
Website: http://www.King.Senate.gov

United States Senate

WASHINGTON, DC 20510

COMMITTEES:
ARMED SERVICES
BUDGET
ENERGY AND NATURAL RESOURCES
INTELLIGENCE
RULES AND ADMINISTRATION

Dear Friends of Cranberry Isles:

It has been a privilege to serve the State of Maine since being sworn into the U.S. Senate.

Much of my time in Washington this past year has been devoted to the Senate Armed Services Committee and the Select Committee on Intelligence. Protecting our homeland and the people of Maine from terrorism and violence remains one of my top priorities. Through my work on the Armed Services Committee, I was able to secure several provisions in the 2016 National Defense Authorization Act that benefit Maine. The legislation authorizes the construction of an additional DDG-51 Arleigh Burke Class Destroyer that could be built at Bath Iron Works and expands the HUBZone program to stimulate economic growth at former military installations like the former Brunswick Naval Air Station.

Returning control to teachers, school districts, and states has also been a primary concern of mine. I am encouraged that the Every Student Succeeds Act has become law. It eliminates the burdensome requirements of the No Child Left Behind Act and ensures access to a quality education for all students. A provision I helped author in the bill will give states the opportunity to pilot the use of their own proficiency-based assessments in lieu of federally-mandated standardized tests. Also included in the bill are several measures I secured to promote local input, fund education technology initiatives, and explore new strategies to increase student access to the internet outside of school.

Communities across Maine have taken bold action to improve their broadband connectivity, and I have been proud to foster federal support for these types of projects. My amendments to the Every Student Succeeds Act will promote the type of work already occurring in Washington County, where students who lack broadband access are able to check out mobile hotspots from their local libraries. Additionally, a bill I co-sponsored, the Community Broadband Act, helped pave the way for the FCC to enact rules protecting the ability of municipalities to invest in better broadband. I am excited by Maine's leadership on this important economic development issue and will continue to support local efforts in this area.

After extensive negotiations, the Senate passed a five-year transportation bill that will increase highway and transit funding in Maine and provide stability to improve our transportation infrastructure. The legislation contains provisions I cosponsored to cut red tape and improve predictability and timeliness by streamlining the federal permitting process for large infrastructure projects. Also incorporated in this bill are my provisions to relieve financial regulations on Maine's community banks and credit unions and to reauthorize the Export-Import Bank, a critical tool that supports communities and small business across the state.

Following my inquiries in the Energy and Natural Resources Committee, the National Park Service has announced they will begin exploring strategies to allow park visitors to purchase electronic passes online and will pilot the program at Acadia National Park. These passes would improve access to our nation's most treasured landscapes and would generate resources for years to come. I remain deeply engaged in preserving Maine's natural beauty and strengthening our outdoor recreation economy.

It is with solemn responsibility that I have focused my energy addressing the opioid epidemic in Maine. This work includes convening roundtables with a wide-range of health care and law enforcement professionals to combat addiction; introducing a proposal to safely dispose of excess prescription drugs; cosponsoring a

AUGUSTA
4 Gabriel Drive, Suite F1
Augusta, ME 04330
(207) 622-8292

PRESQUE ISLE
169 Academy Street, Suite A
Presque Isle, ME 04769
(207) 764-5124

SCARBOROUGH
383 US Route 1, Suite 1C
Scarborough, ME 04074
(207) 883-1588

In Maine call toll-free 1-800-432-1599
Printed on Recycled Paper

Senate-passed bill that addresses mothers struggling with addiction and the alarming effect it has on newborns; cosponsoring the TREAT Act, which expands the ability of medical specialists to provide life-saving medication-assisted therapies for patients battling heroin and prescription drug addiction; and calling on the Commander of U.S. Southern Command to increase efforts to stop the flow of heroin at our southern border.

I like to think of Maine as a big small town – and in a small town, the leaders are accessible and eager to listen. In that spirit, I've made it a priority to stay connected with people from all over Maine who e-mail, write, and call with suggestions or questions. If I can ever assist in your interaction with a federal agency, or you have thoughts, concerns, or personal input on a matter that is currently before Congress I hope you will contact me, let me know where you stand, and engage in this critical part of democracy. Please call my toll-free line at **1-800-432-1599** or one of my offices: Augusta (207) 622-8292, Presque Isle (207) 764-5124, Scarborough (207) 883-1588, or Washington, D.C. (202) 224-5344. You can also write me on our website at www.king.senate.gov/contact.

As always, I am honored to represent the people of Maine and look forward to working with you for the betterment of our great state.

Sincerely,

Angus S. King, Jr.
United States Senator

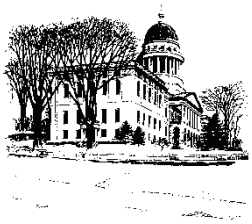

Annual Report to the Town of Cranberry Isles

A Message from Senator Brian D. Langley

Dear Friends and Neighbors:

I would like to thank you once again for the opportunity to represent you in the Maine Senate during the past five years. It has been an honor to work on your behalf to make our state an even better place to live, work and conduct business. I would like to provide to you in this letter a recap of the first year of the 127th Legislature as well as my hopes for the second session, which will begin in January 2016.

The most important item on our to-do list is clear: our state needs more jobs at all levels of the pay scale. It is our responsibility as lawmakers to develop policies that will expand economic opportunity for all Mainers. To this end, my fellow legislators and I accomplished a great deal during the first session of the 127th Legislature.

Very few issues garnered more attention and debate than Maine's two-year budget proposal. There were a lot of things to like and dislike in the package finally approved. It included the largest tax cut in Maine history with residents seeing a net tax cut of $135.4 million in 2017. The budget eliminated taxes on military pensions, so those who have served our country in the military can feel welcomed and at home in our state. We restructured portions of our welfare system, increasing funding for nursing homes, and put far more funding towards eliminating waitlists for services for brain-injured and intellectually disabled Mainers.

As Chair of the Education Committee, I worked hard to secure increased funding for K-12 education. This should hopefully lead to some property tax relief. The budget also maintained revenue sharing, and it increased the tax exemption for the Homestead Property Tax Exemption program.

During the second session of the Legislature, we need to make progress towards addressing the cost of energy in this state. There are a number of bills that have been proposed that would change the way our state's energy system works. I look forward to tackling legislation that would lower your energy costs. I also believe that working to provide support to areas hard-hit by recent mill closings should be a focus of the 2016 session.

Please feel free to contact me if you ever need my assistance in navigating the state bureaucracy. I would be happy to help in any way that I can. I may be reached in Augusta at 287-1505 or by e-mail at langley4legislature@myfairpoint.net.

Sincerely,

Brian D. Langley

Senator Brian D. Langley

Town of Cranberry Isles
P.O. Box 56
Islesford, ME 04646

Dear Friends,

This past year—my first as your Congressman in the U.S. House of Representatives—I am proud to have supported Maine families, local businesses and communities by working hard with Republicans and Democrats to promote policies that will preserve and create jobs and lower energy costs. I have worked to ensure our Veterans and active military members have the services they have earned and deserve, protected the individual rights and liberties they have fought for, and strengthened our national security to keep Americans safe and free.

I have fought tooth and nail to protect and create jobs for Maine. I stood up against the Washington political establishment, including Congressional leadership, to oppose granting fast-track authority to the President, a policy that allows him to facilitate massive international trade agreements that are unfair to American businesses, especially those in Maine. I am also extremely proud to have led the charge in successfully ending unfair and job-killing Canadian subsidies and to win a major victory for Maine by pushing into law a provision that will continue the FDA's use of paper inserts, efforts that combined to preserve hundreds of traditional Maine papermaking jobs.

As a proud member of the Military Veterans Caucus, I have been fighting for our Veterans by supporting several bills to increase funding for Veterans' health programs and hold the VA accountable. I also am proud to have introduced my own bill—the Helping Our Rural Veterans Receive Health Care Act— to give our rural Veterans easier access to their earned health care services by letting local hospitals care for them instead of VA centers far from home. I extend my thanks to all who have served.

In this first year, I also had one of my own bills signed into law. My critical and bipartisan Child Support Assistance Act will help children and their families receive legally due support in a timelier manner from delinquent parents. My District offices also helped hundreds of Maine families resolve issues with federal agencies and get the answers, benefits and services they deserved.

There is much more work to be done. Our Great State and Nation face many critical challenges. Please know that I am working hard, every day, to serve you and that I will continue to work here at home and in Washington for our families, local businesses and communities.

If you ever have any concerns or if I can provide assistance, please contact my Congressional Offices in Bangor (942-0583), Lewiston (784-0768), Presque Isle (764-1968) and Washington, DC (202-225-6306), or visit my website at poliquin.house.gov. It is an honor to represent you and our fellow Mainers in Congress.

Best wishes,

Bruce Poliquin

Bruce Poliquin
Member of Congress

HOUSE OF REPRESENTATIVES
2 STATE HOUSE STATION
AUGUSTA, MAINE 04333-0002
(207) 287-1400
TTY: (207) 287-4469

Walter A. Kumiega III
36 Cedar Lane
Little Deer Isle, ME 04650
Residence: (207) 348-2548
Cell Phone: (207) 479-5459
Walter.Kumiega@legislature.maine.gov

Dear Cranberry Isles Residents,

It is an honor to serve as your State Representative. I intend to work hard to earn your trust and build upon the work I've done representing island communities over the past five years.

The 2016 legislative session will have a limited legislative agenda consisting of emergency legislation and bills carried over from 2015. All legislative work is scheduled to be completed by mid-April.

I will continue my work as House Chair of the Marine Resources Committee. As someone who represents many of Maine's island communities, I want to make sure Maine manages its resources in a way that better balances harvesting and sustainability and also puts more emphasis on maximizing the economic impact for coastal communities. A lot of people depend on marine life to make a living, and it's important to be a voice for them in Augusta. The committee clerk maintains a list of interested parties that get email notification of the committee schedule. Please let me know if you would like to be added to that list.

Another critical issue facing island communities is affordable electricity. With some islands considering a shift to renewables, it is important that state laws and regulations support those efforts.

Whether we are dealing with the above issues or any other topic, I stand ready to work with all of my colleagues, regardless of party affiliation, to make sure we're doing the best work we can for the people of our district and all the people of Maine.

Please contact me if I can be of any help or if you want to discuss or testify on any legislation. My email is wkumiega36@gmail.com. My cellphone is 207-479-5459 for voice or text message. I also send out e-newsletters from time to time. Let me know if you would like to receive them.

Respectfully,

Walter A Kumiega III

Walter Kumiega
State Representative

District 134 Cranberry Isles, Deer Isle, Frenchboro, Isle au Haut, North Haven, Southwest Harbor, Stonington, Swans Island, Tremont and Vinalhaven, plus the unorganized territory of Marshall Island Township

Printed on recycled paper

STATE OF MAINE
OFFICE OF THE GOVERNOR
1 STATE HOUSE STATION
AUGUSTA, MAINE
04333-0001

Paul R. LePage
GOVERNOR

Dear Citizens of Cranberry Isles:

Maine has a long tradition of civil participation in both state and local government, and I thank you for being informed and involved citizens.

My vision for Maine is prosperity, not poverty. For this reason, one of my top priorities is the reduction and eventual elimination of the income tax. Some are pushing to raise the minimum wage, but I want Mainers to earn a maximum wage. Reducing the income tax is the biggest and most immediate pay raise for all hard-working Mainers.

Not only does an income tax cut put more money back in your pockets, but it will also attract businesses that can offer good-paying careers to keep our young people here in Maine. It shows the nation that we are serious about wanting people and businesses to come—and stay—in Maine.

Another of my priorities is to lower the cost of student debt in Maine. If young people are struggling with too much student debt, they are unable to afford homes or vehicles. We are now offering programs to help them lower their debt, stay in Maine, begin their careers and start families.

To provide good-paying jobs for our young people, we must also work hard to reduce our energy costs. High energy costs are a major factor in driving out manufacturers, mills and other businesses that need low-cost electricity. I am committed to lowering the cost of energy, not only to attract job creators, but also to allow Maine people to heat and power their homes affordably and effectively.

And finally, we are making progress to address the drug pandemic in our state. It is my most important duty to keep the Maine people safe. While education, treatment and prevention efforts are important, we must get the dealers off the streets. I am pleased the Legislature has finally agreed to fund my proposal for more drug agents to stem the supply of deadly opiates flowing into our communities, but our law enforcement agencies are still understaffed. We must do more.

It is a pleasure serving as your Governor. If ever I can be of assistance to you or if you have any questions or suggestions, I encourage you to contact my office by calling 287-3531 or by visiting our website at www.maine.gov/governor.

Sincerely,

Paul R. LePage
Governor

PRINTED ON RECYCLED PAPER

PHONE: (207) 287-3531 (Voice) TTY USERS CALL 711 FAX: (207) 287-1034
www.maine.gov

TOWN OF CRANBERRY ISLE, MAINE

FINANCIAL STATEMENTS
WITH INDEPENDENT AUDITOR'S REPORT

FOR THE FISCAL YEAR
ENDED DECEMBER 31, 2015

TOWN OF CRANBERRY ISLES, MAINE
FINANCIAL STATEMENTS AND SUPPLEMENTAL SCHEDULES
DECEMBER 31, 2015

TABLE OF CONTENTS

		PAGE(S)
	INDEPENDENT AUDITOR'S REPORT	1-2
	MANAGEMENT'S DISCUSSION AND ANALYSIS	3-6
EXHIBIT		
	BASIC FINANCIAL STATEMENTS	
	Government-wide Financial Statements	
I	Statement of Net Position	7
II	Statement of Activities	8
	FUND FINANCIAL STATEMENTS	
	Governmental Fund Financial Statements	
III	Balance Sheet	9
IV	Statement of Revenues, Expenditures and Changes in Fund Balances	10
	NOTES TO THE FINANCIAL STATEMENTS	11-20
	REQUIRED SUPPLEMENTARY INFORMATION OTHER THAN MANAGEMENT'S DISCUSSION AND ANALYSIS	
VII	Budgetary Comparison Schedule - General Fund	21
	Pension Disclosure Schedules	
VIII	Proportionate Share of Net Pension Liability	22
IX	Employer Contributions	23
	SUPPLEMENTARY INFORMATION	
	General Fund	
A-1	Schedule of Departmental Operations	24-25
A-2	Schedule of Changes in Unassigned Fund Balance	26
A-3	Schedule of Valuation, Assessment and Collections	27
A-4	Schedule of Expenditures of Federal Awards	28
	Other Governmental Fund Financial Statements	
B-1	Combining Balance Sheet	29
B-2	Combining Statement of Revenues, Expenditures and Changes in Fund Balance	30
	Permanent Fund Financial Statements	
C-1	Combining Balance Sheet	31
C-2	Combining Statement of Revenues, Expenditures and Changes in Fund Balance	32

James W.
Wadman
Certified Public Accountant

Telephone 207-667-6500
Facsimile 207-667-3636

James W. Wadman, C.P.A.
Ronald C. Bean, C.P.A.
Kellie M. Bowden, C.P.A.
Wanese L. Lynch, C.P.A.
Amy E. Atherton, C.P.A.

INDEPENDENT AUDITOR'S REPORT

Members of the Board of Selectmen
Town of Cranberry Isles
Cranberry Isles, Maine 04625

Report on the Financial Statements

We have audited the accompanying financial statements of the governmental activities, the discretely presented component unit, each major fund and the aggregate remaining fund information of the Town of Cranberry Isles, Maine (the Town) as of and for the year ended December 31, 2015, and the related notes to the financial statements, which collectively comprise the Town's basic financial statements as listed in the table of contents.

Management's Responsibility for the Financial Statements

Management is responsible for the preparation and fair presentation of these financial statements in accordance with accounting principles generally accepted in the United States of America; this includes the design, implementation, and maintenance of internal control relevant to the preparation and fair presentation of financial statements that are free from material misstatement, whether due to fraud or error.

Auditor's Responsibility

Our responsibility is to express opinions on these financial statements based on our audit. We conducted our audit in accordance with auditing standards generally accepted in the United States of America. Those standards require that we plan and perform the audit to obtain reasonable assurance about whether the financial statements are free of material misstatement.

An audit involves performing procedures to obtain audit evidence about the amounts and disclosures in the financial statements. The procedures selected depend on the auditor's judgment, including the assessment of the risks of material misstatement of the financial statements, whether due to fraud or error. In making those risk assessments, the auditor considers internal control relevant to the entity's preparation and fair presentation of the financial statements in order to design audit procedures that are appropriate in the circumstances, but not for the purpose of expressing an opinion on the effectiveness of the entity's internal control. Accordingly, we express no such opinion. An audit also includes evaluating the appropriateness of accounting policies used and the reasonableness of significant accounting estimates made by management, as well as evaluating the overall presentation of the financial statements.

We believe that the audit evidence we have obtained is sufficient and appropriate to provide a basis for our audit opinions.

Opinions

In our opinion, the financial statements referred to above present fairly, in all material respects, the respective financial position of the governmental activities, the discretely presented component unit, each major fund and the aggregate remaining fund information of the Town of Cranberry Isles, Maine as of December 31, 2015, and the respective changes in financial position for the fiscal year then ended in accordance with accounting principles generally accepted in the United States of America.

295 Main Street • P.O. Box 889 • Ellsworth, Maine 04605 • wadmancpa.com

Required Supplementary Information

Accounting principles generally accepted in the United States of America require that the management's discussion and analysis, budgetary comparison information and pension disclosure schedules on pages 3 through 6 and 21 through 23 be presented to supplement the basic financial statements. Such information, although not a part of the basic financial statements, is required by the Governmental Accounting Standards Board, who considers it to be an essential part of financial reporting for placing the basic financial statements in an appropriate operational, economic, or historical context. We have applied certain limited procedures to the required supplementary information in accordance with auditing standards generally accepted in the United States of America, which consisted of inquiries of management about the methods of preparing the information and comparing the information for consistency with management's responses to our inquiries, the basic financial statements, and other knowledge we obtained during our audit of the basic financial statements. We do not express an opinion or provide any assurance on the information because the limited procedures do not provide us with sufficient evidence to express an opinion or provide any assurance.

Supplementary Information

Our audit was conducted for the purpose of forming opinions on the financial statements that collectively comprise the Town of Cranberry Isles' financial statements as a whole. The combining and individual nonmajor fund financial statements and supplementary information are presented for purposes of additional analysis and are not a required part of the financial statements. The combining and individual nonmajor fund financial statements and supplementary information are the responsibility of management and were derived from and relate directly to the underlying accounting and other records used to prepare the financial statements.

The information has been subjected to the auditing procedures applied in the audit of the financial statements and certain additional procedures, including comparing and reconciling such information directly to the underlying accounting and other records used to prepare the financial statements or to the financial statements themselves, and other additional procedures in accordance with auditing standards generally accepted in the United States of America. In our opinion, the information is fairly stated in all material respects in relation to the financial statements as a whole.

Respectfully Submitted,

James W. Wadman, C.P.A.

James W. Wadman, C.P.A.
March 2, 2016

TOWN OF CRANBERRY ISLES, MAINE
Management's Discussion and Analysis
For the Year Ended December 31, 2015

The management of the Town of Cranberry Isles, Maine (the Town) offers readers of the Town's financial statements this narrative overview and analysis of the financial activities of the Town for the year ended December 31, 2015. We encourage readers to consider this information in conjunction with the financial statements and accompanying notes that follow.

FINANCIAL HIGHLIGHTS – PRIMARY GOVERNMENT

Government-wide Highlights:
Net Position – The assets of the Town exceeded its liabilities at the year ending December 31, 2015 by $5,729,821 (presented as "net position"). Of this amount, $775,184 was reported as "unrestricted net position". Unrestricted net position represents the amount available to be used to meet the Town's ongoing obligations to citizens and creditors.

Changes in Net Position – The Town's total net position increased by $421,921 (a 7.9% increase) for the year ended December 31, 2015.

Fund Highlights:
Governmental Funds – Fund Balances – As of the close of the year ended December 31, 2015; the Town's governmental funds reported a combined ending fund balance of $961,656, a decrease of $427,913 in comparison with the prior year. Of this total fund balance, $18,962 represents general unassigned fund balance. This unassigned fund balance represents approximately 0.8% of the total general fund expenditures for the year.

Long-term Debt:
The Town's total long-term debt obligations had a net decrease of $249,242 (10.1%) during the current fiscal year. There were no new debt obligations issued during the year. Existing debt obligations were retired according to schedule.

OVERVIEW OF THE FINANCIAL STATEMENTS
This discussion and analysis is intended to serve as an introduction to the Town's basic financial statements. The Town's basic financial statements include three components: 1) government-wide financial statements, 2) fund financial statements, and 3) notes to the financial statements. This report also contains additional required supplementary information (budgetary comparison) and other supplementary information. These components are described below:

Government-wide Financial Statements
The government-wide financial statements present the financial picture of the Town from the economic resources measurement focus using the accrual basis of accounting and are designed to provide readers with a broad overview of the Town's finances, in a manner similar to a private-sector business. They distinguish functions of the Town that are principally supported by taxes and intergovernmental revenues (governmental activities) from other functions that are intended to recover all or a significant portion of their costs through user fees and charges (business-type activities). The statement of net position includes all assets of the Town (including infrastructure) as well as all liabilities (including long-term debt), with the difference between the two reported as net position. The statement of activities shows how the Town's net position changed during the year, regardless of the timing of related cash flows. The government-wide financial statements can be found on pages 7 - 8 of this report.

The government-wide financial statements include not only the Town itself (known as the primary government), but also a legally separate entity - The Cranberry Isles Volunteer Fire Club - for which the Town is financially accountable. Financial information for this component unit is reported separately from the financial information for the primary government itself.

Fund Financial Statements
A fund is a grouping of related accounts that is used to maintain control over resources that have been segregated for specific activities or objectives. The fund financial statements include statements for one category of activity – governmental funds.

The governmental activities are prepared using the current financial resources measurement focus and the modified accrual basis of accounting and are used to account for essentially the same functions reported as governmental activities in the government-wide financial statements. However, the governmental fund financial statements focus on near-term inflows and

outflows of spendable resources, as well as on balances of spendable resources available at the end of the fiscal year. Both the governmental fund balance sheet and the governmental fund statement of revenues, expenditures and changes in fund balance provide a reconciliation to explain the differences between the governmental funds and governmental activities. The basic governmental fund financial statements can be found on pages 9 - 10 of this report.

Notes to the Financial Statements
The notes provide additional information that is essential to a full understanding of the data provided in the government-wide and the fund financial statements. The notes to the financial statements can be found on pages 11 - 20 of this report.

Required Supplementary Information
This section includes pension disclosure schedules as well as a budgetary comparison schedule, which includes a reconciliation between the statutory fund balance for budgetary purposes and the fund balance for the general fund as presented in the governmental fund financial statements (if necessary). Required supplementary information can be found on pages 21 - 23 of this report.

GOVERNMENT-WIDE FINANCIAL ANALYSIS
Net Position

The largest portion of the Town's net position (81.0%) reflects its investment in capital assets such as land, buildings, equipment and infrastructure (roads, bridges and other immovable assets); less any related debt used to acquire those assets that is still outstanding. The Town uses these capital assets to provide services to citizens; consequently, these assets are not available for future spending. Although, the Town's investment in its capital assets is reported net of related debt, it should be noted that the resources needed to repay this debt must be provided from other sources, since the capital assets themselves cannot be used to liquidate these liabilities.

	Governmental Activities	Business-like Activities	Total 2015	Total 2014
Current Assets	$ 1,152,508	$ 0	$ 1,152,508	$ 1,528,580
Capital Assets	$ 6,855,761	$ 0	$ 6,855,761	$ 6,278,526
Deferred Outflows	$ 2,324		$ 2,324	
Total Assets and Deferred Outflows	$ 8,010,593	$ 0	$ 8,010,593	$ 7,807,106
Current Liabilities	$ 347,400	$ 0	$ 347,400	$ 310,130
Other Liabilities	$ 1,932,604	$ 0	$ 1,932,604	$ 2,189,075
Deferred Inflows	$ 767	$ 0	$ 767	$ 1
Net Position;				
Invested in Capital Assets	$ 4,640,561	$ 0	$ 4,640,561	$ 3,814,084
Restricted	$ 314,076	$ 0	$ 314,076	$ 283,056
Unrestricted	$ 775,185	$ 0	$ 775,185	$ 1,210,760
Total Liabilities and Net Position	$ 8,010,593	$ 0	$ 8,010,593	$ 7,807,106

An additional portion of the Town's net position (5.5%) represents resources that are subject to external restrictions on their use. The remaining balance of unrestricted net position (13.5%) may be used to meet the government's ongoing obligations to citizens and creditors.

Changes in Net Position
Governmental activities increased the Town's net position by $421,921. This increase was primarily due to conservative budgeting and controlled costs.

	Governmental Activities	Business-like Activities	Total 2015	Total 2014
Revenues;				
Tax Revenues	$ 1,928,546	$ 0	$ 1,928,546	$ 1,703,869
Program Revenues	$ 212,997	$ 0	$ 212,997	$ 183,908
Investments	$ 9,407	$ 0	$ 9,407	$ 5,628
Revenue Sharing	$ 2,551	$ 0	$ 2,551	$ 2,203
Other	$ 26,639	$ 0	$ 26,639	$ 28,072
Total Revenues	$ 2,180,140	$ 0	$ 2,180,140	$ 1,923,680
Expenses;				
General Government	$ 347,102	$ 0	$ 347,102	$ 302,296
Protection	$ 100,786	$ 0	$ 100,786	$ 126,556
Health/Sanitation	$ 107,554	$ 0	$ 107,554	$ 100,661
Transportation	$ 566,274	$ 0	$ 566,274	$ 498,826
Unclassified	$ 23,928	$ 0	$ 23,928	$ 22,855
Education	$ 508,099	$ 0	$ 508,099	$ 241,831
Assessments and Debt Service	$ 104,476	$ 0	$ 104,476	$ 138,691
Total Expenses	$ 1,758,219	$ 0	$ 1,758,219	$ 1,431,716
Changes in Net Position	$ 421,921	$ 0	$ 421,921	$ 491,964

Revenues by Source - Governmental and Business-Type

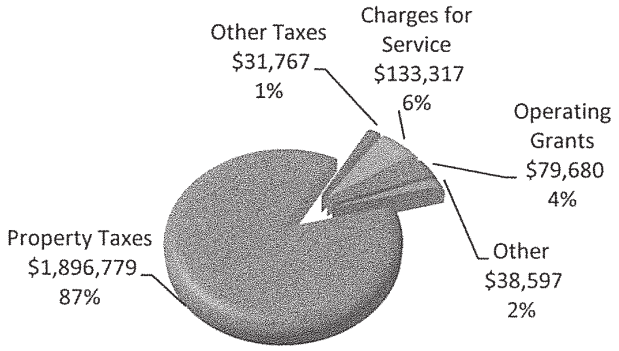

Expenditures by Source - Governmental and Business-Type

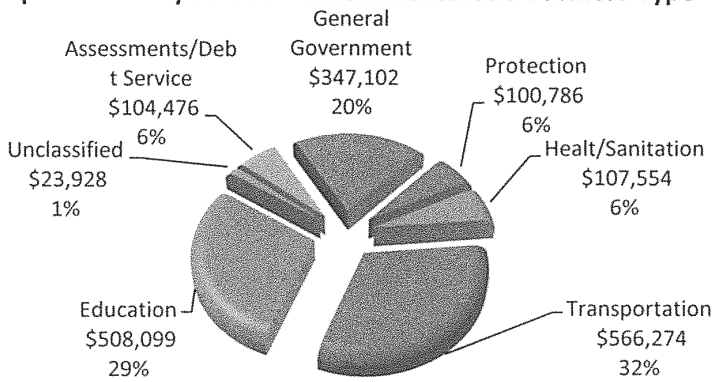

FINANCIAL ANALYSIS OF THE TOWN'S INDIVIDUAL FUNDS

Governmental Funds

The focus of the Town's governmental funds is to provide information on near-term inflows, outflows, and balances of spendable resources. Such information is useful in assessing the Town's financing requirements. In particular, unassigned fund balance may serve as a useful measure of a government's net resources available for spending at the end of the year.

At the end of the fiscal year, the Town's governmental funds reported ending fund balances of $961,656, a decrease of $427,913 in comparison with the prior year. Approximately 2.0 percent of this total amount constitutes unassigned fund balance. The remainder is reserved to indicate that it is not available for new spending because it has been committed to liquidate contracts and commitments of the prior fiscal year or for a variety of other purposes.

GENERAL FUND BUDGETARY HIGHLIGHTS

Variances between actual General Fund revenues and expenditures and the final amended budget included the following:

- $52,410 negative variance in real estate and personal property tax revenues. Actual collections were 90.3% of the levy as compared to 92.9% in the prior year. This caused an increase in the unavailable property tax revenue. This unavailable property tax revenue adjustment plus discounts given for early payment are the primary reasons for the negative variance.
- $12,444 positive variance in all other revenues. This is primarily due to conservative budgeting of revenues and most revenues coming in around or over budget.
- $492,143 negative variance in education expenditures. This is primarily due to capital projects and operational costs being funded by prior year reserve funds.
- $36,681 negative variance in general government expenditures. This is primarily due to the expense of the revaluation that was done which was mainly funded by the revaluation reserve.
- $71,738 positive variance in protection expenditures. This is primarily due to controlled costs and conservative budgeting particularly in Zone 1.
- $27,060 positive variance in transportation expenditures. This is primarily due to controlled costs and conservative budgeting as well as the planned increase in reserves for future projects.
- $12,049 positive variance in all other expenditures. This is mainly due to controlled costs and conservative budgeting.

CAPITAL ASSET AND DEBT ADMINISTRATION

Capital Assets

The Town's investment in capital assets for its governmental activities amounts to $9,332,686, net of accumulated depreciation of $2,476,925, leaving a net book value of $6,855,761. There were current year additions of $512,821 of school department building improvements, $206,575 of road improvements and $52,313 of a new cistern water tank. There were current year retirements of $12,000 for a small parcel of land that was sold to a resident. Additional information on the Town's capital assets can be found in Note 4 of the notes to the financial statements on pages 15 - 16 of this report.

Debt

The Town has total bonded debt outstanding of $1,145,133 and $1,070,066 total outstanding loans that is backed by the full faith and credit of the Town. The outstanding debt had a net decrease of $249,242 during the current fiscal year. Additional information on the Town's long-term debt can be found in Note 6 of the notes to the financial statements on pages 16 - 17 of this report.

REQUESTS FOR INFORMATION

This financial report is designed to provide a general overview of the Town's finances for all citizens, taxpayers, investors and creditors. This financial report seeks to demonstrate the Town's accountability for the money it receives. Questions concerning any of the information provided in this report or requests for additional information should be addressed to: Town of Cranberry Isles, P.O. Box 56, Islesford, ME 04646.

TOWN OF CRANBERRY ISLES, MAINE
STATEMENT OF NET POSITION
DECEMBER 31, 2015

(Exhibit I)

	Governmental Activities	*Component Unit Cranberry Isles Fire Club*
Assets & Deferred Outflows		
Assets		
Cash and Cash Equivalents	$833,662	$23,594
Accounts Receivable	$134,708	
Taxes Due	$184,137	
Capital Assets		
Land	$1,449,485	
Other Capital Assets, net of Accumulated Depreciation	$5,406,276	$53,258
Total Capital Assets	$6,855,761	$53,258
Total Assets	$8,008,269	$76,852
Deferred Outflows of Resources		
Related to Pensions	$2,324	$0
Total Deferred Outflows of Resources	$2,324	$0
Total Assets & Deferred Outflows	$8,010,593	$76,852
Liabilities, Deferred Inflows & Net Position		
Liabilities		
Accounts Payable	$63,108	
Net Pension Liability	$1,696	
General Obligation Bonds Payable		
Due within one year	$284,292	
Due in more than one year	$1,930,908	
Total Liabilities	$2,280,004	$0
Deferred Inflows of Resources		
Prepaid Property Taxes	$12	
Related to Pensions	$755	
Total Deferred Inflows of Resources	$767	$0
Net Position		
Net Investment in Capital Assets	$4,640,561	$53,258
Restricted	$314,076	
Unrestricted	$775,184	$23,594
Total Net Position	$5,729,821	$76,852
Total Liabilities, Deferred Inflows and Net Position	$8,010,593	$76,852

The Notes to the Financial Statements are an Integral Part of this Statement.

TOWN OF CRANBERRY ISLES, MAINE *(Exhibit II)*
STATEMENT OF ACTIVITIES
FOR THE YEAR ENDED DECEMBER 31, 2015

		Program Revenues		Net (Expense)Revenue and Changed in Net Position	
				Primary Government	*Component Unit*
Functions/Programs		*Charges for*	*Operating*	*Governmental*	*Cranberry Isles*
Primary Government	*Expenses*	*Services*	*Grants*	*Activities*	*Fire Club*
Governmental Activities					
General Government	$347,101			($347,101)	
Public Safety	$100,786			($100,786)	
Health & Sanitation	$107,554			($107,554)	
Public Transportation	$566,274	$133,317	$6,968	($425,989)	
Education	$508,099		$72,712	($435,387)	
Unclassified	$23,928			($23,928)	
Assessments & Debt Service	$104,476			($104,476)	
Total Governmental Activities	$1,758,219	$133,317	$79,680	($1,545,221)	$0
Total Primary Government	$1,758,219	$133,317	$79,680	($1,545,221)	$0
Component Unit					
Operating Expenses	$8,412				($8,412)
Administrative	$108				($108)
Total Component Unit	$8,520	$0	$0	$0	($8,520)
General Revenues:					
Tax Revenues				$1,896,779	
Excise Taxes				$31,767	
State Revenue Sharing				$2,551	
Local Sources				$26,639	$12,977
Interest Earned				$9,407	$14
Donations				$0	$5,375
Total Revenues				$1,967,143	$18,366
Changes in Net Position				$421,921	$9,846
Net Position - Beginning				$5,307,900	$67,006
Net Position - Ending				$5,729,821	$76,852

The Notes to the Financial Statements are an Integral Part of this Statement.

TOWN OF CRANBERRY ISLES, MAINE *(Exhibit III)*

BALANCE SHEET - GOVERNMENTAL FUNDS

DECEMBER 31, 2015

	General Fund	*Other Governmental Funds*	*Permanent Funds*	*Totals Governmental Funds*
Assets				
Cash and Cash Equivalents	$806,441	$1,270	$25,951	$833,662
Taxes Due - Current Year	$156,134			$156,134
Taxes Due - Prior Years	$28,003			$28,003
Accounts Receivable	$134,708			$134,708
Due from Other Funds	$4,270	$30,101		$34,371
Total Assets	$1,129,557	$31,371	$25,951	$1,186,878
Liabilities, Deferred Inflows & Fund Balances				
Liabilities;				
Accounts Payable	$63,108			$63,108
Due to Other Funds	$30,101		$4,270	$34,371
Total Liabilities	$93,209	$0	$4,270	$97,479
Deferred Inflows of Resources				
Prepaid Property Taxes	$12			$12
Unavailable Property Tax Revenue	$127,731			$127,731
Total Deferred Inflows	$127,743	$0	$0	$127,743
Fund Balances;				
Nonspendable			$18,100	$18,100
Restricted	$265,876	$30,101		$295,976
Committed	$528,808			$528,808
Assigned	$94,959	$1,270	$3,580	$99,810
Unassigned	$18,962			$18,962
Total Fund Balances	$908,605	$31,371	$21,680	$961,656
Total Liabilities & Fund Balances	$1,129,557	$31,371	$25,951	$1,186,878

Total Fund Balance - Governmental Funds	$961,656
Net position reported for governmental activities in the statement of net position are different because:	
Capital assets used in governmental activities are not financial resources and therefore are not reported in the funds	$6,855,761
Deferred outflows of resources related to pension plans	$2,324
Deferred inflows of resources related to pension plans	($755)
Delinquent taxes are recognized as revenue in the period for which levied in the government-wide financial statements, but are reported as unavailable revenue (a deferred inflow) in governmental funds	$127,731
Some liabilities are not due and payable in the current period and therefore, are not reported in the funds, including:	
Bonds Payable	($2,215,200)
Net Pension Liability	($1,696)
Net Position of Governmental Activities	$5,729,821

The Notes to the Financial Statements are an Integral Part of this Statement.

TOWN OF CRANBERRY ISLES, MAINE *(Exhibit IV)*

STATEMENT OF REVENUES, EXPENDITURES & CHANGES
IN FUND BALANCES - GOVERNMENTAL FUNDS
FOR THE YEAR ENDED DECEMBER 31, 2015

	General Fund	*Other Governmental Funds*	*Permanent Funds*	*Total Governmental Funds*
Revenues:				
Tax Revenues	$1,873,294			$1,873,294
State Road Assistance		$6,968		$6,968
Auto Excise Taxes	$27,330			$27,330
Boat Excise Taxes	$4,438			$4,438
State Revenue Sharing	$2,551			$2,551
Miscellaneous Earnings	$26,639			$26,639
Interest Earned	$9,376	$1	$30	$9,407
Rent and Parking Fees	$133,317			$133,317
Total Revenues	$2,076,945	$6,969	$30	$2,083,944
Expenditures(Net of Departmental Revenues):				
General Government	$347,101			$347,101
Protection	$76,575			$76,575
Health & Sanitation	$105,219			$105,219
Public Transportation	$416,267			$416,267
Education	$429,340			$429,340
Unclassified	$23,928			$23,928
Assessments and Debt Service	$353,718			$353,718
Capital Outlay	$759,708			$759,708
Total Expenditures	$2,511,857	$0	$0	$2,511,857
Excess Revenues Over Expenditures	($434,912)	$6,969	$30	($427,913)
Beginning Fund Balances	$1,343,517	$24,402	$21,650	$1,389,569
Ending Fund Balances	$908,605	$31,371	$21,680	$961,656

Reconciliation to Statement of Activities, Change in Net Position	
Net Change in Fund Balances - Above	($427,913)
Some expenses reported in the statement of activities do not require the use of current financial resources and therefore, are not reported as expenditures in governmental funds:	
Pension Plans (Deferred Outflows, Net Pension Liability, Deferred Inflows)	($127)
Delinquent taxes are recognized as revenue in the period for which levied in the government-wide financial statements, but are recorded as unavailable revenue (a deferred inflow) in governmental funds	$23,484
Bond proceeds provide current financial resources to Governmental Funds, but issuing debt increases long-term liabilities in the Government-Wide Statement of Net Position. Repayment of bond principal is an expenditure in Governmental Funds, but the repayment reduces long-term liabilities in the Government-Wide Statement of Net Position	
This amount represents long-term debt payments	$249,242
Governmental funds report capital outlays as expenditures, while in the Statement of Activities, the cost of those assets is allocated over the useful lives as depreciation expense.	$759,708
Depreciation expense on capital assets is reported in the Government-Wide Statement of Activities and Changes in Net Position, but they do not require the use of current financial resources. Therefore, depreciation expense is not reported as expenditures in Governmental Funds.	($182,473)
Changes in Net Position of Governmental Activities	$421,921

The Notes to the Financial Statements are an Integral Part of this Statement.

Note 1 - Summary of Significant Accounting Policies

The financial statements of the Town of Cranberry Isles, Maine (the Town) have been prepared in conformity with accounting principles generally accepted in the United States of America, as applied to governmental units (hereinafter referred to as generally accepted accounting principles (GAAP)). The Governmental Accounting Standards Board (GASB) is the accepted standard setting body for the governmental accounting and financial reporting principles. The more significant of the Town's accounting principles are described below.

A. Financial Reporting Entity

The accompanying financial statements present the government of the Town of Cranberry Isles, Maine, which is identified based upon the criteria identified in Governmental Accounting Standards Board (GASB) Statement 14, as amended, *The Financial Reporting* Entity. The Town is governed under a Selectmen form of government. The Town engages in a comprehensive range of municipal services, including administrative services, public safety, health and sanitation, transportation, education and cultural services. The financial statements include all operations of the Town. Control or dependence is determined on the basis of budget adoption, taxing authority, funding and appointment of the respective governing board.

The accompanying financial statements present the government and its component unit, an entity for which the government is considered to be financially accountable. The component unit, although a legally separate entity, is, in substance, part of the government's operations. The Town's discretely presented component unit is reported in a separate column in the government-wide financial statements to emphasize that it is legally separate from the government.

Discretely presented component unit: The Cranberry Isles Volunteer Fire Club operates as a volunteer fire department and is responsible public safety of the residents of Cranberry Isles. The Cranberry Isles Volunteer Fire Club is fiscally dependent on the government to pay for some of its operational costs and the government has funded some of the capital assets.

B. Government-wide and Fund Financial Statements

The government-wide financial statements (i.e. the statement of net position and the statement of activities) report information on all of the activities of the Town. The material effect of interfund activity has been removed from these statements. *Governmental activities*, which normally are supported by taxes and intergovernmental revenues, are reported separately from *business-type,* which rely to a significant extent on fees and charges for support.

The statement of activities demonstrates the degree to which the direct expenses of a given function or segment are offset by program revenues. *Direct expenses* are those that are clearly identifiable with a specific function or segment. Functional expenses may also include an element of indirect cost, designed to recover administrative (overhead) costs. *Program revenues* include 1) charges to customers or applicants who purchase, use or directly benefit from goods, services or privileges provided by a given function or segment and 2) grants and contributions that are restricted to meeting the operational or capital requirements of a particular function or segment. Taxes and other items not properly included among program revenues are reported instead as *general revenues.*

For the year ended 12/31/15, the Town has implemented GASB Statements #68, which accounts for the Town's proportionate share of net pension liability for the Maine Public Employees Retirement System.

C. Measurement Focus, Basis of Accounting and Financial Statement Presentation

The government-wide financial statements are reported using the *total economic resources measurement focus* and the *accrual basis of accounting*. Revenues and additions are recognized when received and expenses and deductions are recognized when a liability is incurred, regardless of the timing of related cash flows. Property taxes are recognized as revenues in the year for which they are levied (i.e. intended to finance). Grants are recognized as revenue as soon as all eligibility requirements have been met.

The governmental fund financial statements are reported using the *current financial resources measurement focus* and the *modified accrual basis of accounting*. Revenues are recognized when they are both measurable and available. Revenues are considered to be available when they are collectible within the current period or soon enough thereafter to pay liabilities of the current period. For this purpose, the Town considers revenues to be available if they are collected within 60 days of the end of the current fiscal period. Expenditures generally are recorded when a liability is incurred, as under accrual accounting. However, debt service expenditures, including interest on long-term debt, are recognized only when payment is due.

Property taxes, charges for services and interest associated with the current fiscal period are all considered to be susceptible to accrual and are recognized as revenues of the current fiscal period. All other revenue items are considered to be measurable and available only when cash is received by the Town.

The Town reports unearned revenue on its governmental fund financial statements. Unearned revenues arise when a potential revenue does not meet both the "measurable" and "available" criteria for recognition in the current period. Unearned revenues also arise when resources are received by the Town before it has a legal claim to them, as when grant monies are received prior to the incurrence of qualifying expenditures. In subsequent periods, when both revenue recognition criteria are met, or when the Town has a legal claim to the resources, the liability for unearned revenue is removed from the balance sheet and the revenue is recognized.

The Town reports the following major governmental funds:

The general fund is the Town's primary operating fund. It accounts for all financial resources of the general government, except those required to be accounted for in another fund.

The special revenue funds are used to account for the proceeds of specific revenue sources (other than expendable trust or major capital projects) requiring separate accounting because of legal or regulatory provisions or administrative action. See Exhibit B-1 and B-2 for what is included in this fund type.

Permanent funds are used to account for assets held in perpetuity and therefore cannot be used to support the Town's own programs, but the investment earnings may be used for designated purposes.

Amounts reported as program revenues include 1) charges to customers or applicants for goods, services, fines and forfeitures, or privileges provided, 2) operating grants and contributions, and 3) capital grants and contributions, including special assessments. Internally dedicated resources are reported as general revenues rather than as program revenues. Likewise, general revenues include all taxes.

When both restricted and unrestricted resources are available for use, it is the Town's policy to use restricted resources first, then unrestricted resources as they are needed.

D. Assets, Liabilities and Net Position or Fund Balances

Deposits

The Town's cash and cash equivalents are considered to be cash on hand, demand deposits and short-tem investments with original maturities of one year or less from the date of acquisition. These investments are not specifically identifies with any other fund.

The Town may invest in certificates of deposit, in time deposits, and in any securities in which State of Maine Statutes authorize them to invest in.

Accounts Receivable and Accounts Payable

All material receivables are reported at their gross value and, where appropriate, are reduced by the estimated portion that is expected to be uncollectible.

Because of their spending measurement focus, expenditure recognition for governmental fund types excludes amounts represented by noncurrent liabilities. Since they do not affect current assets, such long-term amounts are not recognized as governmental fund type expenditures or fund liabilities.

Capital Assets

Capital assets, which include property, plant, equipment and infrastructure (e.g. roads, bridges, sidewalks and similar items), are reported in the applicable governmental or business-type activities columns in the government-wide financial statements. Capital assets are defined by the Town as assets with an initial, individual cost of more than $5,000 and an estimated useful life in excess of one year. Such assets are recorded at historical cost or estimated historical cost if purchased or constructed. Donated capital assets are recorded at estimated fair value at the date of donation.

The costs of normal maintenance and repairs that do not add to the value of the asset or materially extend asset lives are not capitalized. Major outlays for capital assets and improvements are capitalized as projects are constructed. Interest incurred during the construction phase of capital assets of business-type activities is included as part of the capitalized value of the asset constructed. Property, plant and equipment is depreciated using the straight line method over the following estimated useful lives;

Assets	*Years*
Buildings and Improvements	20-50
Infrastructure	10-50
Equipment	5-20

Pensions

For purposes of measuring the net pension liability, deferred outflows of resources and deferred inflows of resources related to pensions, and pension expense, information about the fiduciary net position of the Maine Public Employees Retirement System (System) and additions to / deductions from the Systems' fiduciary net position have been determined on the same basis as they are reported by the System. For this purpose, benefit payments (including refunds of employee contributions) are recognized when due and payable pursuant to formal commitments or statutory requirements. Investments are reported at fair value. Investment income is recognized when earned and investment expenses are recognized when incurred.

Interfund Transactions

During the course of normal operations, the Town has various transactions between funds, including transfers of revenues and expenditures. The accompanying governmental fund financial statements reflect such transactions as operating transfers.

Long-Term Obligations

In the government-wide financial statements, long-term debt and other long-term obligations are reported as liabilities in the applicable governmental activities. In the fund financial statements, governmental funds recognize the face amount of debt issued as other financing sources.

Governmental Fund Balances

The Town has identified December 31, 2015 fund balances on the balance sheet as follows:

	General Fund	*Special Revenue Fund*	*Permanent Fund*	*Total*
Nonspendable				
Cemetery Trust Principal			$18,100	$18,100
Restricted				
School Department	$261,177			$261,177
Shore Harbor Grant	$4,699			$4,699
Highway Reserve		$30,101		$30,101
Committed				
Public Safety Coordinator	$4,993			$4,993
Fire Department Zone 1	$86,498			$86,498
Fire Department Zone 2	$27,013			$27,013
Fire Department Zone 3	$2,283			$2,283
EMS Reserve	$27,466			$27,466

Tuition Designated Fund	$16,220			$16,220
Special Education Reserve	$108,642			$108,642
School Capital Project	$28,446			$28,446
Garage Building Fund	$10,825			$10,825
Vehicle Disposal	$848			$848
Ramp Fees Reserve	$10,255			$10,255
Telemed Health Clinic	$2,411			$2,411
LCI Dock Ext Reserve	$44,747			$44,747
Wharves	$60,313			$60,313
Intermodal Facility	$95,761			$95,761
GCI Restroom Project	($5,716)			($5,716)
Manset Dock Study	$7,804			$7,804
Assigned				
Fireproof Safe Reserve	$1,538			$1,538
Town Roads	$50,121			$50,121
Snow Removal	$18,365			$18,365
Town Trucks	$24,935			$24,935
Truck Account		$1,270		$1,270
Cemetery Trust Income			$3,580	$3,580
Unassigned	$18,962			$18,962
Total Fund Balances	$908,605	$31,371	$21,680	$961,656

The Town considers restricted, committed, assigned and unassigned amounts to be spent in that order when expenditures are incurred for which any of those amounts are available.

The Board of Selectmen are authorized to make assignments pursuant to their appointment. Committed fund balances are determined based on the need of town meeting votes.

Net Position

Net position are required to be classified into three components - net investment in capital assets, restricted and unrestricted. These classifications are defined as follows:

Net investment in capital assets - This component of net position consist of capital assets, net of accumulated depreciation, reduced by the outstanding balances of any bonds, mortgages, notes or other borrowings that are attributable to the acquisition, construction, or improvements of those assets.

Restricted - This component of net position consists of restrictions placed on net position use through external constraints imposed by creditors (such as debt covenants), grantors, contributors, or law or regulations of other governments, or constraints imposed by law through constitutional provisions or enabling legislation. The government-wide statement of net position reports $314,076 of restricted net position, of which enabling legislation restricts $0.

Unrestricted - This component consists of net position that do not meet the definition of "restricted" or "net investment in capital assets."

E. Budgetary Accounting

Formal budgetary accounting is employed as a management control for the general fund only. Annual operating budgets are adopted each fiscal year by the registered voters of the Town at their annual Town meeting. Budgets are established in accordance with generally accepted accounting principles. Budgetary control is exercised at the selectman level, since individual department heads do not exist. All unencumbered budget appropriations lapse at the end of the year unless specifically designated by the Board of Selectmen or required by law.

F. Endowments

In the permanent funds, there are established endowment funds of $18,100 for the Cemetery Trust Fund. The investment earnings

of these funds are used for the specific purposes that the funds were established for and shall be paid out by order of those persons responsible for administering the funds. State law directs that, subject to the intent of a donor expressed in the gift instrument, an institution may appropriate for expenditure or accumulate so much of an endowment fund as the institution determines is prudent for the uses, benefits, purposes, and duration for which the endowment is established. The current amount available for expenditure is $3,580 from the Cemetery Trust Fund, which is reported as unrestricted net position in the statement of net position. The initial endowment principal is reported as restricted net position in the statement of net position.

G. Estimates

The preparation of financial statements in conformity with accounting principles generally accepted in the United States of America requires management to make estimates and assumptions that affect the reported amounts of assets and liabilities and disclosure of contingent assets and liabilities at the date of the financial statements and the reported amounts of revenues and expenses during the reporting period. Actual results could differ from those estimates.

Note 2 - Deposits

Custodial credit risk is the risk that in the event of a bank failure, a government's deposits may not be returned to it. The Town's deposit policy for custodial credit risk requires compliance with the provisions authorized by Maine State Statutes. The Town requires that, at the time funds are deposited, there is collateral in place to cover the deposits in excess of the FDIC insurance limits.

State Statutes require banks either to give bond or to pledge government securities (types of which are specifically identified in the Statutes) to the Town in the amount of the Town's deposits. The Statutes allow pledged securities to be reduced by the amount of the deposits insured by the Federal Deposit Insurance Corporation (FDIC).

The financial institution holding the Town's cash accounts is participating in the FDIC Program. For interest bearing cash accounts, the Town's cash deposits, including non-interest bearing accounts, are aggregated and are insured up to $250,000 in total by the FDIC. Any cash deposits, including certificates of deposit, in excess of the $250,000 FDIC limits are covered by collateral held in a Federal Reserve pledge account and thus no custodial credit risk exists.

At year end, the carrying value of the Town's deposits was $833,662 and the bank balance was $802,854. The Town has no uninsured and uncollateralized deposits as of December 31, 2015.

Note 3 - Property Taxes

Property taxes were assessed on April 1, 2015 and committed on August 3, 2015. Interest of 7% per annum is charged on delinquent taxes. Tax liens are recorded on property taxes remaining unpaid nine to ten months after the commitment date. Tax liens unpaid for a period of eighteen months expire and the property becomes tax acquired by the Town. For governmental funds, only property taxes which are intended to finance the current fiscal year and collected within 60 days subsequent to year end are recorded as revenue. Accordingly, $127,731 of the property taxes receivable have been classified as unavailable property tax revenue on the general fund balance sheet.

Note 4 - Capital Assets

Capital asset activity for the year ended December 31, 2015 was as follows:

	Beginning Balance	*Increases*	*Decreases*	*Ending Balance*
Governmental Activities:				
Capital assets not being depreciated				
Land	$1,461,485		$12,000	$1,449,485
Capital assets being depreciated				
Buildings and Improvements	$2,912,351	$512,821		$3,425,171
Equipment	$1,087,783	$52,313		$1,140,096
Infrastructure	$3,111,359	$206,575		$3,317,934
Total capital assets being depreciated	$7,111,493	$771,708	$0	$7,883,201

Less accumulated depreciation for				
Buildings and Improvements	$604,995	$56,443		$661,439
Equipment	$198,441	$44,222		$242,663
Infrastructure	$1,491,015	$81,808		$1,572,823
Total accumulated depreciation	$2,294,452	$182,473	$0	$2,476,925
Net capital assets being depreciated	$4,817,041	$589,235	$0	$5,406,276
Governmental Activities, Capital Assets, net	$6,278,526	$589,235	$12,000	$6,855,761

Depreciation expense was charged to functions/programs of the primary government as follows;

Governmental Activities	
Solid Waste	$2,335
Public Safety	$24,211
Education	$5,920
Public Transportation, including depreciation of general infrastructure assets	$150,007
Total Depreciation Expense - Governmental Activities	$182,473

Note 5 - Interfund Transactions

During the course of operations, numerous transactions occur between individual funds that may result in amounts owed between funds. On the Governmental Fund financial statements, the payables are classified as Due to Other Funds with offsetting receivables on the Governmental Fund financial statements classified as Due from Other Funds. At December 31, 2015, the offsetting receivable and payable balances were $34,371. The change in the balance of the accounts during the current year represent appropriation transfers between special revenue fund truck reserve, the cemetery trust fund and the general fund. The majority of the interfund balance represents appropriations to the highway reserve for future capital road improvements. There is also an interfund balance for cemetery care costs payable to the general fund from the cemetery trust. The balances are expected to be repaid upon need of the funds.

Note 6 - Long-Term Debt

The Town issues general obligation bonds and notes to provide funds for the acquisition and construction of major capital assets. General obligation bonds and notes are direct obligations and pledge the full faith and credit of the Town. The following is a summary of long-term debt transactions of the Town of Cranberry Isles for the year ended December 31, 2015:

Debt Outstanding at January 1, 2015	$2,464,442
Long-Term Debt Issued	$0
Long-Term Debt Retired	($249,242)
Debt Outstanding at December 31, 2015	$2,215,200

Permanent financing for the Town's Intermodal Transportation Facility was secured in 2003. Bonds are issued separately based on the use of the proceeds. The bonds are for twenty years with interest ranging from 2.078% to 5.078%. The bonds are held by the Maine Municipal Bond Bank. The balance at December 31, 2015 was $1,145,133.

In 2008, a general obligation bond was secured with The First for the construction of a town garage for $245,000. Interest is paid at an annual rate of 4.51 percent. The bond is for fifteen years. The balance at December 31, 2015 is $149,747.

In 2008, a general obligation bond was secured with The First for the purchase of a fire truck for $90,000. Interest is paid at an annual rate of 4.097 percent. The bond is for ten years. The balance at December 31, 2015 is $31,786.

In 2012, a general obligation bond was secured with The First for the capital road construction for $175,000. Interest is paid at an annual rate of 2.66 percent. The bond is for five years. The balance at December 31, 2015 is $48,931.

In 2013, a general obligation bond was secured with Tax-Exempt Leasing Corp for the purchase of a fire truck for $218,366. Interest is paid at an annual rate of 2.89 percent. The bond is for ten years. The balance at December 31, 2015 is $179,523.

In 2014, a general obligation bond was secured with The First for School capital improvements for $610,000. Interest is paid at an annual rate of 3.10 percent. The bond is for ten years. The balance at December 31, 2015 is $530,079.

As part of the 2010 town meeting, the Town was approved to secure $130,000 debt financing for capital road improvements. As of the end of the year, the Town had not secured the financing for those funds. The Town anticipates writing off the debt financing during 2016. The debt proceeds for this anticipated loan have been recorded on the general fund with an offset to accounts receivable. Based on initial discussions with a financial institution regarding this funding, the pay back of this loan was estimated to be over five years at 4.0% interest. This estimated pay back is included in the debt service requirements below and the outstanding debt balance as of year end above.

All bonds are to be repaid through tax revenues.

Annual debt service requirements to maturity of the general obligation bonds including estimated interest are as follows:

Year	*Principal*	*Estimated Interest*	*Total*
2016	$284,292	$90,261	$374,552
2017	$269,125	$79,847	$348,972
2018	$268,653	$69,737	$338,390
2019	$265,898	$59,392	$325,290
2020-2024	$1,127,232	$122,268	$1,249,500
	$2,215,200	$421,504	$2,636,703

Note 7 - Defined Benefit Employee Pension Plan

A. Plan Description

Qualifying personnel of the School Department participate in the Maine Public Employees Retirement System (System) State Employee and Teacher (SET) Plan. The Plan is a multiple-employer, cost-sharing pension plan with a special funding situation. The State of Maine is also a non-employer contributing entity in that the State pays the initial unfunded actuarial liability on behalf of teachers, while school systems contribute the normal cost, calculated actuarially, for their teacher members.

B. Pension Benefits

Benefit terms are established in Maine Statute. The System's retirement programs provide defined retirement benefits based on member's average final compensation and service credit earned as of retirement. Vesting (i.e., eligibility for benefits upon reaching qualification) occurs upon the earning of five years of service credit for State employees and teachers. In some cases, vesting occurs on the earning of one year of service credit immediately preceding retirement at or after normal retirement age. Normal retirement age for State employees and teachers is age 60, 62 or 65. The normal retirement age is determined by whether a member had met certain creditable service requirements on specific dates, as established by statute. The monthly benefit of members who retire before normal retirement age by virtue of having at least 25 years of service credit is reduced by a statutorily prescribed factor for each year of age that a member is below her/his normal retirement age at retirement. The System also provides disability and death benefits which are established by statute for State employee and teacher members.

Upon termination of membership, members' accumulated employee contributions are refundable with interest, credited in accordance with statute. Withdrawal of accumulated contributions results in forfeiture of all benefits and membership rights. The annual interest credited to members' accounts is set by the System's Board of Trustees.

C. Member and Employer Contributions

Retirement benefits are funded by contributions from members, employers, the State and by earnings on investments. Disability and death benefits are funded by employer normal cost contributions and by investment earnings. Member and employer contribution rates are each a percentage of applicable member compensation. Member contribution rates are defined by law or Board rule and depend on the terms of the Plan under which a member is covered. Employer contribution rates are determined through actuarial valuations. For the year ended June 30, 2015, the member contribution rate was 7.65% and the employer contribution rate was

2.65% of applicable member compensation. The employer is also responsible for contributing 13.5% of all federally funded member compensation. The State of Maine, as a non-employer contributing entity, pays 11.94% of the applicable member compensation into the System.

The required contributions paid into the System for the year ended June 30, 2015 and the previous two years are as follows:

For the year ended June 30,	*Employee Contributions*	*Employer Contributions*	*State of Maine Contributions*	*Applicable Member Compensation*	*Applicable Member Federal Compensation*
2015	$10,610	$3,676	$18,072	$138,698	$0
2014	$9,713	$3,608	$16,310	$126,970	$1,800
2013	$10,707	$258	$19,785	$139,964	$1,800

D. Revenue Recognition

Employer contributions to the System are recognized as additions in the period when they become due pursuant to formal commitments or statutory requirements. Investment income is recognized when earned and investment expenses are recognized when incurred. For the teacher group, total employer and non-employer contributions were the basis for the allocation, adjusted to remove the normal cost contributions paid by local school systems on behalf of their employees. This leaves contributions toward the net pension liability of the Plan as the basis of allocation. This method of allocation properly distributes the collective net pension liability between the State of Maine as the non-employer contributing entity and those School Systems contributing towards the net pension liability of the Plan using grant funding.

E. Pension Liabilities, Pension Expense, and Deferred Outflows of Resources and Deferred Inflows of Resources Related to Pensions

At June 30, 2015, the School Department reported a net pension liability of $1,696. The net pension liability was measured as of June 30, 2014 and the total pension liability used to calculate the net pension liability was determined by actuarial valuation as of that date. The School Department's proportion of the net pension liability was based on a projection of the School Department's long-term share of contributions to the pension plan relative to the projected contributions of all participating members. At June 30, 2015 the School Department's proportion was 0.000%, which was a change of (0.0%) from its proportion measured at June 30, 2014.

For the fiscal year ended June 30, 2015, the School Department recognized pension expense of $1,198. At June 30, 2015, the School Department reported deferred outflows of resources and deferred inflows of resources related to pensions from the following sources:

	Deferred Outflows of Resources	*Deferred Inflows of Resources*
Differences between expected and actual experience	$0	$8
Changes in Assumptions	$117	$0
Net Difference between projected between projected and actual earnings on pension plan investments	$0	$726
Changes in proportion and differences between employer contributions and proportionate share of contributions	$2,207	$21
	$2,324	$755

Amounts reported as deferred outflows of resources and deferred inflows of resources related to pensions will be recognized in pension expense as follows:

Year ended June 30,	
2016	$966
2017	$965
2018	($181)
2019	($181)

F. Actuarial Assumptions

The total pension liability in the June 30, 2014 actuarial valuation was determined using the following actuarial assumptions, applied to all periods included in the measurement:

Inflation	3.50%
Salary Increases	3.50% - 13.50% at selected years of service
Investment Rate of Return	7.125%, net of administrative and pension plan investment expense

For the School Department employees, the mortality rate is based on the RP2000 Combined Mortality Tables for males and females using Scale AA with a two year set back.

The actuarial assumptions used in the June 30, 2014 valuation were based on the results of an actuarial experience study performed in 2011 and covered the period July 1, 2005 - June 30, 2010.

The long-term expected rate of return on pension plan investments were determined using a building-block method in which best-estimate ranges of expected future real rates of return (expected returns, net of pension plan investment expense and inflation) are developed for each major class of assets. These ranges are combined to produce the long-term expected rate of return by weighing the expected future real rates of return by the target asset allocation percentage and by adding expected inflation. Best estimates of arithmetic real rates of return for each major asset class included in the pension plan's target asset allocation as of June 30, 2014 are summarized in the following table:

Asset Class	*Target Allocation*	*Long-Term Expected Real Rate of Return*
US Equities	20%	2.5%
Non-US Equities	20%	5.5%
Private Equity	10%	7.6%
Real Assets:		
Real Estate	10%	3.7%
Infrastructure	10%	4.0%
Hard Assets	5%	4.8%
Fixed Income	25%	0.0%
	100%	

G. Discount Rate

The discount rate used to measure the total pension liability was 7.125%. The projection of cash flows used to determine the discount rate assumed that plan member contributions will be made the current contribution rate and that employer and non-employer entity contributions will be made at contractually required rates, actuarially determined. Based on these assumptions, the pension plan's fiduciary net position was projected to be available to make all projected future benefit payments to current plan members. Therefore, the long-term expected rate of return on pension plan investments was applied to all periods of projected benefit payments to determine the total pension liability.

H. Sensitivity of the Proportionate Share of the Net Pension Liability to Changes in the Discount Rate

The following presents the School Department's proportionate share of the net pension liability calculated using the discount rate of 7.125%, as well as what the School Department's proportionate share of the net pension liability would be if it were calculated using a discount rate that is 1 percentage point lower (6.125%) or 1 percentage point higher (8.125%) than the current rate:

	1% Decrease (6.125%)	*Current Discount Rate (7.125%)*	*1% Increase (8.125%)*
Proportionate Share of the Net Pension Liability	$3,249	$1,696	$397

I. Pension Plan Financial and Actuarial Information

Additional financial information and actuarial information can be found in the Systems' 2014 Comprehensive Annual Financial Report available online at www.mainepers.org or by contacting the System at (207) 512-3100.

Note 8 - Restricted Net Position

The Town reports restricted net position totaling $314,076 on its statement of net position. These restricted net position represent the nonspendable and restricted fund balances detailed in the governmental fund balance note above.

Note 9 - Commitment and Contingencies

The School Department participates in a number of federal and state assisted grant programs. These programs are subject to financial and compliance audits. The amount of expenditures, if any, which may be disallowed by the granting agencies is not determinable at this time, however, the School Department does not believe such amounts would be significant.

Note 10 - Risk Management

The Town is exposed to various risk of loss related to torts; theft of, damage to, and destruction of assets; errors and omissions; injuries to employees; and natural disasters for which it carries municipal and commercial insurance. The Town is not aware of any material actual or potential claim liabilities which should be recognized at December 31, 2015.

Note 11 - Pending Litigation

According to management, there are no matters that would result in material adverse losses, claims or assessments against the Town through the date of the audit report.

TOWN OF CRANBERRY ISLES, MAINE *(Exhibit V)*

REQUIRED SUPPLEMENTARY INFORMATION

BUDGETARY COMPARISON SCHEDULE - GENERAL FUND

FOR THE YEAR ENDED DECEMBER 31, 2015

	Original Budget	*Final Budget*	*Actual*	*Variance Favorable (Unfavorable)*
Revenues:				
Tax Revenues	$1,925,704	$1,925,704	$1,873,294	($52,410)
Auto Excise Taxes	$26,000	$26,000	$27,330	$1,330
Boat Excise Taxes	$4,000	$4,000	$4,438	$438
State Revenue Sharing	$3,500	$3,500	$2,551	($949)
Miscellaneous Administrative Earnings	$27,850	$27,850	$26,639	($1,211)
Interest Earned	$3,000	$3,000	$9,376	$6,376
Rent and Parking Fees	$133,825	$133,825	$133,317	($508)
Total Revenues	$2,123,879	$2,123,879	$2,076,945	($46,935)
Expenditures(Net of Departmental Revenues):				
General Government	$298,420	$298,420	$335,101	($36,681)
Protection	$200,625	$200,625	$128,887	$71,738
Health & Sanitation	$110,135	$110,135	$105,219	$4,916
Highways & Bridges	$649,902	$649,902	$622,842	$27,060
Education	$480,018	$480,018	$942,161	($462,143)
Unclassified	$23,200	$23,200	$23,928	($728)
Assessments and Debt Service	$361,579	$361,579	$353,718	$7,861
Total Expenditures	$2,123,879	$2,123,879	$2,511,857	($387,978)
Excess Revenues Over Expenditures	$0	$0	($434,912)	($434,912)
Beginning Fund Balance	$1,343,517	$1,343,517	$1,343,517	$0
Ending Fund Balance	$1,343,517	$1,343,517	$908,605	($434,912)

TOWN OF CRANBERRY ISLES, MAINE *(Exhibit VIII)*
REQUIRED SUPPLEMENTARY INFORMATION
SCHEDULE OF PROPORTIONATE SHARE OF NET PENSION LIABILITY
MAINE PUBLIC EMPLOYEES RETIREMENT SYSTEM
FOR THE YEAR ENDED DECEMBER 31, 2015

Last 10 Fiscal Years *	For the Fiscal Year Ended June 30, 2015
Proportion of Net Pension Liability	0.000%
Proportionate Share of the Net Pension Liability (Asset)	$1,696
Covered Employee Payroll	$138,698
Proportionate Share of the Net Pension Liability (Asset) as a % Of Its Covered Employee Payroll	1.223%
Plan Total Pension Liability	$12,320,158,783
Plan Fiduciary Net Position	$10,337,615,927
Plan Net Pension Liability	$1,982,542,856
Plan Fiduciary Net Position as a % Of the Total Pension Liability	83.91%
Plan Covered Employee Payroll	$1,676,857,294
Plan Net Pension Liability as a % Of the Covered Employee Payroll	118.23%

* Amounts presented for each fiscal year were determined as of June 30. Retroactive information is not required to be presented. A full 10 year schedule will be displayed as it becomes available

TOWN OF CRANBERRY ISLES, MAINE
REQUIRED SUPPLEMENTARY INFORMATION
SCHEDULE OF EMPLOYER CONTRIBUTIONS
MAINE PUBLIC EMPLOYEES RETIREMENT SYSTEM
FOR THE YEAR ENDED DECEMBER 31, 2015

(Exhibit IX)

Last 10 Fiscal Years *	For the Fiscal Year Ended June 30, 2015
Contractually required contribution	$3,676
Actual Contribution	($3,676)
Contribution Deficiency	$0
Covered Employee Payroll	$138,698
Contributions as a % of Covered Employee Payroll	2.650%

* Amounts presented for each fiscal year were determined as of June 30. Retroactive information is not required to be presented. A full 10 year schedule will be displayed as it becomes available

TOWN OF CRANBERRY ISLES, MAINE
SCHEDULE OF DEPARTMENTAL OPERATIONS
FOR THE YEAR ENDED DECEMBER 31, 2015

(Exhibit A-1)

Department	*Beginning Balance*	*Approp-riations*	*Cash Receipts*	*Other Credits*	*Total Available*	*Warrants Drawn*	*Other Charges*	*Lapsed Unexpended (Overdraft)*	*Ending Balance*
General Government:									
Administration	$0	$166,765	$0	$571	$167,336	$157,533	$3,905	$5,898	$0
Tax Collector/Treasurer/Clerk	$0	$42,525	$0	$0	$42,525	$42,525	$0	$0	$0
Deputy Treasurer/Clerk	$0	$20,000	$0	$0	$20,000	$20,352	$0	($352)	$0
Public Safety Coordinator	$3,781	$20,000	$0	$0	$23,781	$18,068	$720	$0	$4,993
Elections	$0	$1,000	$0	$0	$1,000	$900	$0	$100	$0
Planning Board	$0	$630	$0	$0	$630	$630	$0	$0	$0
Assessors	$0	$27,500	$0	$0	$27,500	$27,333	$0	$167	$0
Revaluation Reserve	$40,800	$0	$0	$0	$40,800	$43,800	$0	($3,000)	$0
Contingencies	$0	$20,000	$0	$0	$20,000	$19,150	$756	$94	$0
	$44,581	$298,420	$0	$571	$343,572	$330,291	$5,381	$2,907	$4,993
Protection									
Public Safety - Zone 1	$14,408	$76,525	$0	$206	$91,139	$3,242	$1,399	$0	$86,498
Public Safety - Zone 2	$21,868	$75,600	$0	$673	$98,141	$70,605	$523	$0	$27,013
Public Safety - Zone 3	$585	$2,000	$0	$0	$2,585	$302	$0	$0	$2,283
CIFC Septic System Reserve	$17,500	$0	$0	$0	$17,500	$17,500	$0	$0	$0
EMS	$18,539	$26,200	$0	$275	$45,014	$16,923	$625	$0	$27,466
911 Dispatch Services	$0	$1,100	$0	$0	$1,100	$544	$0	$556	$0
Fire Proof Safe	$1,538	$0	$0	$0	$1,538	$0	$0	$0	$1,538
Animal Control	$0	$1,700	$0	$0	$1,700	$1,725	$0	($25)	$0
Constable	$0	$5,500	$0	$0	$5,500	$5,000	$0	$500	$0
Harbor Master	$0	$2,500	$0	$0	$2,500	$2,000	$0	$500	$0
Street Lights	$0	$5,500	$0	$638	$6,138	$5,396	$896	($154)	$0
Insurance	$0	$4,000	$0	$0	$4,000	$4,000	$0	$0	$0
	$74,438	$200,625	$0	$1,792	$276,855	$127,236	$3,443	$1,377	$144,798
Health & Sanitation:									
Solid Waste	$0	$96,835	$0	$7,903	$104,738	$94,253	$9,402	$1,084	$0
CEO & Plumbing Inspector	$0	$10,000	$0	$0	$10,000	$7,896	$0	$2,104	$0
Health & General Assistance	$0	$2,500	$0	$0	$2,500	$772	$0	$1,728	$0
Health Officer	$0	$800	$0	$0	$800	$800	$0	$0	$0
	$0	$110,135	$0	$7,903	$118,038	$103,721	$9,402	$4,916	$0
Education:									
Education	$236,874	$480,018	$72,712	$19,354	$808,958	$512,724	$35,057	$0	$261,177
Tuition Designated Fund	$16,072	$0	$0	$148	$16,220	$0	$0	$0	$16,220
Special Education Reserve	$101,391	$0	$7,000	$251	$108,642	$0	$0	$0	$108,642
School Capital Project	$521,891	$0	$5,000	$0	$526,891	$498,445	$0	$0	$28,446
	$876,229	$480,018	$84,712	$19,753	$1,460,712	$1,011,170	$35,057	$0	$414,485

TOWN OF CRANBERRY ISLES, MAINE
SCHEDULE OF DEPARTMENTAL OPERATIONS
FOR THE YEAR ENDED DECEMBER 31, 2015

(Exhibit A-1)
(continued)

Department	*Beginning Balance*	*Approp-riations*	*Cash Receipts*	*Other Credits*	*Total Available*	*Warrants Drawn*	*Other Charges*	*Lapsed Unexpended (Overdraft)*	*Ending Balance*
Public Transportation:									
Town Roads	$58,595	$218,000	$0	$0	$276,595	$226,474	$0	$0	$50,121
Snow Removal	$26,020	$27,200	$0	$0	$53,220	$34,855	$0	$0	$18,365
Town Trucks	$15,191	$3,800	$10,106	$0	$29,097	$4,162	$0	$0	$24,935
LCI Dock Ext Reserve	$0	$44,747	$0	$0	$44,747	$0	$0	$0	$44,747
Wharves	$53,150	$172,253	$0	$4,806	$230,210	$164,947	$4,950	$0	$60,313
Shore & Harbor Grant	$4,949	$0	$0	$0	$4,949	$250	$0	$0	$4,699
Garage Building Fund	$7,956	$5,300	$136	$0	$13,391	$2,567	$0	$0	$10,825
Vehicle Disposal	$18,898	$0	$0	$0	$18,898	$18,050	$0	$0	$848
Ramp Fees Reserve	$12,710	$0	$0	$0	$12,710	$2,456	$0	$0	$10,255
Commuter Service	$634	$60,352	$26,667	$2,333	$89,986	$70,784	$20,185	($983)	
Engineering-Manset Dock	$7,804	$0	$0	$0	$7,804	$0	$0	$0	$7,804
GCI Public Bathroom Facility	($5,716)	$0	$0	$0	($5,716)	$0	$0	$0	($5,716)
Intermodal Facility	$95,093	$118,250	$132,147	$1,632	$347,122	$116,690	$134,671	$0	$95,761
	$295,284	$649,902	$169,056	$8,771	$1,123,013	$641,236	$159,805	($983)	$322,956
Unclassified:									
Libraries	$0	$8,300	$0	$0	$8,300	$8,300	$0	$0	$0
Human Service Organizations	$0	$4,000	$0	$0	$4,000	$3,750	$0	$250	$0
Scholarship	$0	$1,000	$0	$0	$1,000	$1,000	$0	$0	$0
Island Explorer	$0	$500	$0	$0	$500	$500	$0	$0	$0
Telemed Health Clinic	$2,873	$0	$0	$0	$2,873	$462	$0	$0	$2,411
Cemeteries	$0	$400	$0	$0	$400	$916	$0	($516)	$0
Community Centers	$0	$9,000	$0	$0	$9,000	$9,000	$0	$0	$0
	$2,873	$23,200	$0	$0	$26,073	$23,928	$0	($266)	$2,411
Assessments and Debt Service									
Zone 2 Fire Truck Debt	$0	$10,985	$0	$0	$10,985	$10,984	$0	$1	$0
Zone 2 Fire Truck Debt	$0	$25,460	$0	$0	$25,460	$25,456	$0	$4	$0
Manset Property Debt	$0	$176,032	$0	$0	$176,032	$176,031	$0	$1	$0
Town Garage Debt	$0	$22,610	$0	$0	$22,610	$22,602	$0	$8	$0
Town Roads Debt Service	$0	$37,420	$0	$0	$37,420	$37,420	$0	$0	$0
County Tax	$0	$82,500	$0	$0	$82,500	$81,225	$0	$1,275	$0
Overlay	$0	$6,572	$0	$0	$6,572	$0	$1	$6,571	$0
	$0	$361,579	$0	$0	$361,579	$353,718	$1	$7,861	$0
TOTALS	$1,293,406	$2,123,879	$253,768	$38,791	$3,709,843	$2,591,300	$213,089	$15,812	$889,643

TOWN OF CRANBERRY ISLES, MAINE *(Exhibit A-2)*

SCHEDULE OF CHANGES IN UNASSIGNED FUND BALANCE

FOR THE YEAR ENDED DECEMBER 31, 2015

Beginning Unassigned Fund Balance		$50,111
Additions:		
Lapsed Accounts (Exhibit A-1)	$15,812	
Supplemental Taxes	$5,604	
Auto and Boat Excise (Net of Appropriation)	$1,767	
Solid Waste (Net of Appropriation)	$659	
Other Revenues (Net of Appropriation)	$4,316	
Total Additions		$28,158
Reductions:		
Increase in unavailable Tax Revenues (Note 3)	$23,484	
Tax Discounts	$21,305	
Abatements	$13,585	
Tree Growth (Net of Appropriation)	$933	
Total Reductions		$59,308
Ending Unassigned Fund Balance		$18,962

TOWN OF CRANBERRY ISLES, MAINE
VALUATION, COMMITMENT AND COLLECTIONS
FOR THE YEAR ENDED DECEMBER 31, 2015

(Exhibit A-3)

Taxable Valuation:		
Land and Buildings	$193,250,700	
Personal Property	$47,400	
Total Taxable Valuation		$193,298,100
Tax Rate per $1,000 Valuation		$9.95
Tax Commitment		1,923,316
Collections and Adjustments:		
Cash Collections	$1,737,633	
Abatements	$13,585	
Supplemental Taxes	($5,604)	
Discounts Allowed	$21,567	
Total Collections and Adjustments		$1,767,182
Unpaid Taxes December 31		$156,134

TOWN OF CRANBERRY ISLES, MAINE
SCHEDULE OF EXPENDITURES OF FEDERAL AWARDS
FOR THE YEAR ENDED DECEMBER 31, 2015

(Exhibit A-4)

Federal Grantor/Pass-Through Grantor/Program Title	*CFDA #*	*Grantor Pass-Through Number*	*Program Award Amount*	*Expenditures*
U.S. Department of Education:				
Passed through State of Maine Department of Education				
Rural Education Achievement Program	84.358		$18,467	$18,467
Total State of Maine Department of Education			$18,467	$18,467
Total U.S. Department of Education			$18,467	$18,467
Totals			$18,467	$18,467

TOWN OF CRANBERRY ISLES, MAINE *(Exhibit B-1)*

COMBINING BALANCE SHEET - OTHER GOVERNMENTAL FUNDS

DECEMBER 31, 2015

	Truck Account	*Highway Reserve*	*Total Other Governmental*
Assets			
Cash and Cash Equivalents	$1,270		$1,270
Due From Other Funds		$30,101	$30,101
Total Assets	$1,270	$30,101	$31,371
Fund Balances			
Fund Balances;			
Restricted		$30,101	$30,101
Assigned	$1,270		$1,270
Total Fund Balances	$1,270	$30,101	$31,371

TOWN OF CRANBERRY ISLES, MAINE *(Exhibit B-2)*

COMBINING STATEMENT OF REVENUES, EXPENDITURES AND CHANGES IN FUND BALANCES - OTHER GOVERNMENTAL FUNDS

FOR THE YEAR ENDED DECEMBER 31, 2015

	Truck Account	*Highway Reserve*	*Total Other Governmental*
Revenues;			
State Subsidies		$6,968	$6,968
Interest Earned	$1		$1
Total Revenues	$1	$6,968	$6,969
Expenditures;			
Public Transportation	$0	$0	$0
Total Expenditures	$0	$0	$0
Excess of Revenues Over Expenditures	$1	$6,968	$6,969
Beginning Fund Balance	$1,269	$23,133	$24,402
Ending Fund Balance	$1,270	$30,101	$31,371

TOWN OF CRANBERRY ISLES, MAINE
COMBINING BALANCE SHEET - PERMANENT FUNDS
DECEMBER 31, 2015

(Exhibit C-1)

	Cemetery Trusts
Assets	
Cash and Cash Equivalents	$25,951
Total Assets	$25,951
Liabilities and Fund Balances	
Liabilities:	
Due to Other Funds	$4,270
Total Liabilities	$4,270
Fund Balance:	
Reserve for Endowments	$18,100
Designated for Subsequent Year's Expenditures	$3,580
Total Fund Balance	$21,680
Total Liabilities and Fund Balances	$25,951

The Notes to the Financial Statements are an Integral Part of this Statement.

Cash Balances Consists of:	
Nathan Stanley	$1,251
Mann, McSor, McFarland, Beal	$4,609
Julia Spurling	$1,493
Gary Spurling	$1,131
M.S. Spurling	$5,934
Bunker Trust	$1,058
Cora Spurling	$2,418
Christopher Swenson	$550
Hazel Stanley Peterson	$720
Hadlock, Stanley	$6,786
	$25,951

TOWN OF CRANBERRY ISLES, MAINE *(Exhibit C-2)*

COMBINING STATEMENT OF REVENUES, EXPENDITURES AND CHANGES IN FUND BALANCES - PERMANENT FUNDS

FOR THE YEAR ENDED DECEMBER 31, 2015

	Cemetery Trusts
Revenues	
Interest Earned	$30
Total Revenues	$30
Expenditures	
Cemetery Care	$0
Total Expenditures	$0
Excess of Revenues Over Expenditures	$30
Fund Balances - Beginning	$21,650
Fund Balances - Ending	$21,680